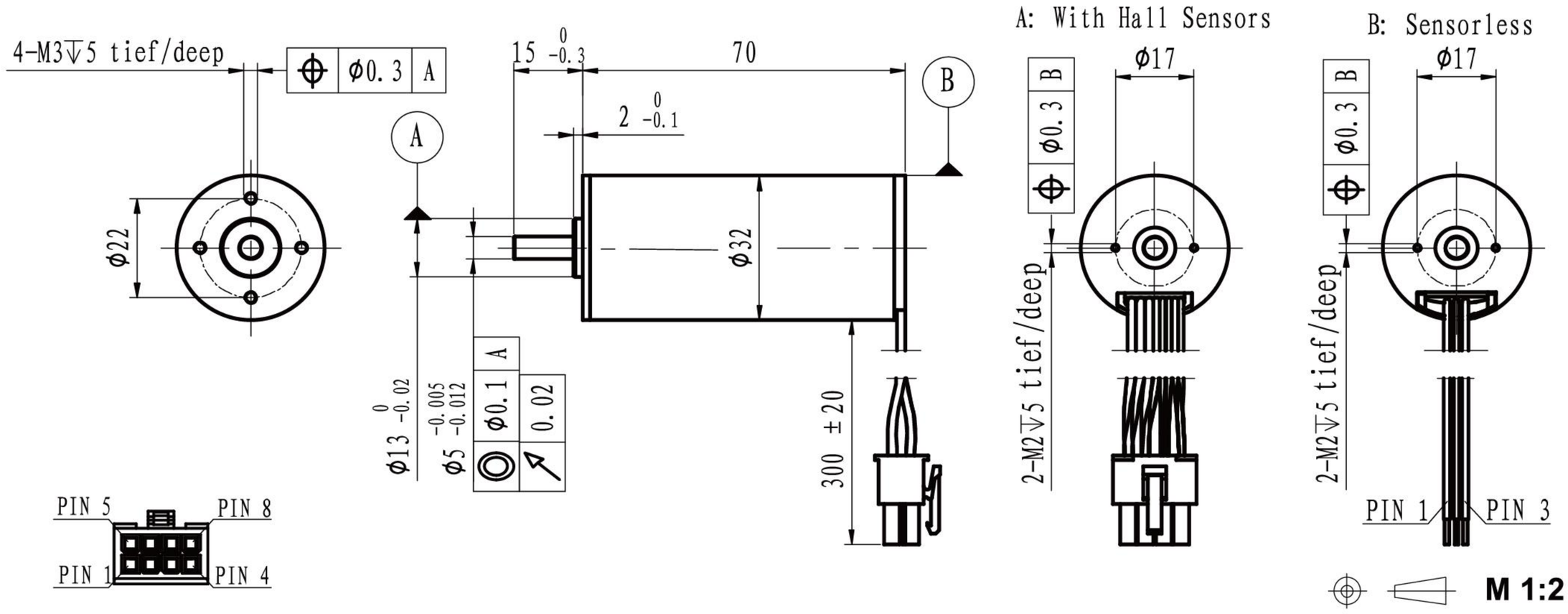

	Sensorless With hall sensor	EC3270L-… EC3270S-…	1209	2409	3609	4809				
Motor data										
Values at nominal voltage										
1	Nominal voltage	V	12	24	36	48				
2	No load speed	rpm	8998	9055	9252	9080				
3	No load current	mA	450	180	100	90				
4	Nominal speed	rpm	7991	7963	8129	8077				
5	Nominal torque	mNm	70	70	70	70				
6	Nominal current	A	6.00	2.97	2.00	1.49				
7	Stall torque	mNm	625.35	580.67	576.72	633.67				
8	Stall current	A	50.00	23.30	15.72	12.73				
9	Max. efficiency	%	81.9	83.2	84.7	83.9				
10	Terminal resistance	Ω	0.24	1.03	2.29	3.77				
11	Terminal inductance	mH	0.09	0.35	0.75	1.33				
12	Torque constant	mNm/A	12.62	25.11	36.92	50.12				
13	Speed constant	rpm/V	757	380	259	191				
14	Speed/torque gradient	rpm/mNm	14	16	16	14				
15	Mechanical time constant	ms	2.8	3.0	3.1	2.8				
16	Rotor inertia	gcm^2	18.5	18.5	18.5	18.5				

17	Thermal resistance housing-ambient	4.7 K/W
18	Thermal resistance winding-housing	2.9 K/W
19	Thermal time constant winding	38 s
20	Thermal time constant motor	568 s
21	Ambient temprature	-30…+100℃
22	Max. permissible winding temperature	+150℃
23	Max. permissible speed	25000 rpm
24	Axial play at axial load <8 N	0 mm
	>8 N	max. 0.3 mm
25	Radial play	preloaded
26	Max. axial load (dynamic)	7.5 N
27	Max.force for press fits (static)	100 N
	(static, shaft supported)	2700 N
28	Max. radial loading, 5mm from flange	25 N
29	Number of pole pairs	1
30	Number of phases	3
31	Weight of motor	256 g

Operating Range

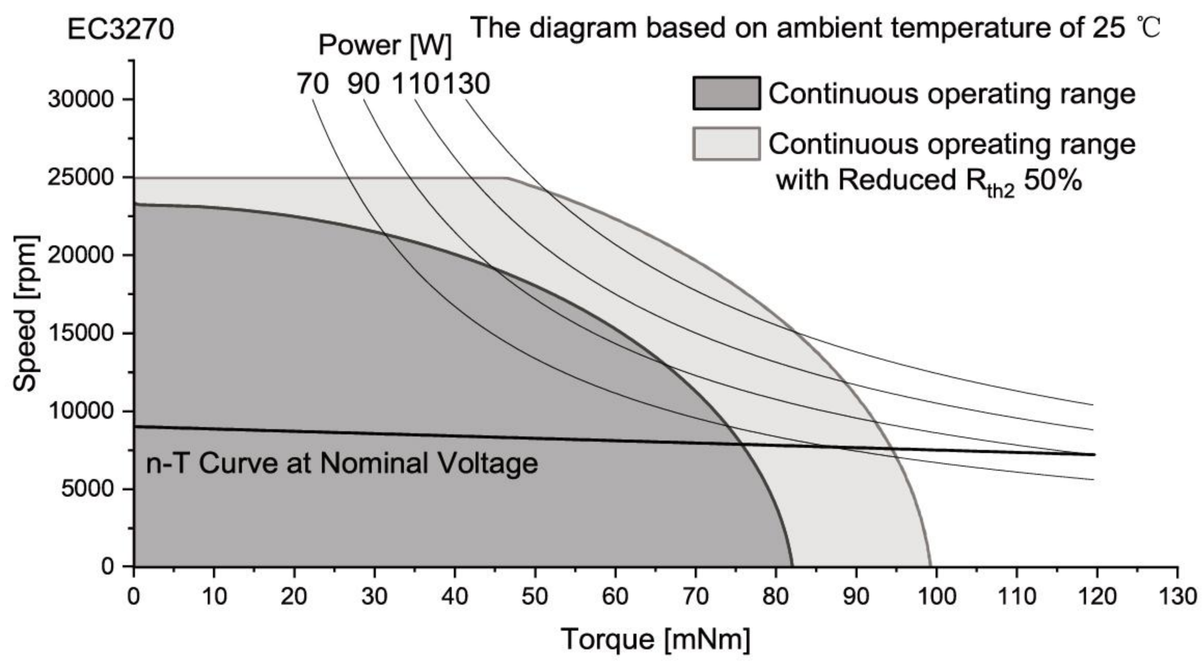

Connection

Conection A (Sensor)		PTFE	
Pin 1	Motor winding MB	AWG20	Green
Pin 2	Vhall 3-18 VDC	AWG26	Red
Pin 3	Hall sensor HA	AWG26	Yellow
Pin 4	Hall sensor HC	AWG26	Blue
Pin 5	Motor winding MA	AWG20	Yellow
Pin 6	Motor winding MC	AWG20	Blue
Pin 7	GND	AWG26	Black
Pin 8	Hall sensor HB	AWG26	Green
Conector			
Molex5557-8P			
Conection B (Sensorless)		PTFE	
Pin 1	Motor winding MA	AWG20	Yellow
Pin 2	Motor winding MB	AWG20	Green
Pin 3	Motor winding MC	AWG20	Blue

Configuration

Performance: Customized in the continuous operating range
Ball bearing: Preload
Flange: Standard frange front&back/customize the frange
Shaft: Length/Diameter/Cut face/double shaft/hollow shaft
Leadwire: PVC/Silicon/Teflon/UL No/Dimension/length
Connector: JST/MOLEX/TE