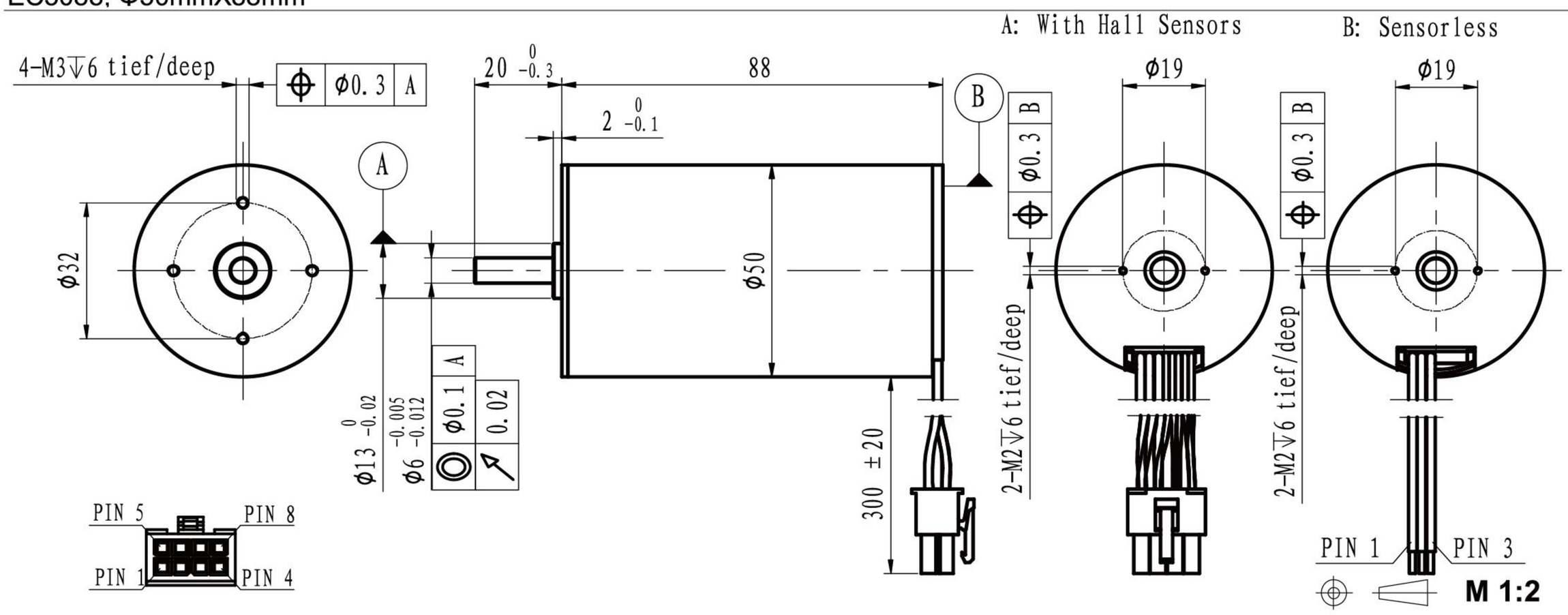

	Sensorless With hall sensor	EC5088L-… EC5088S-…	2408	3608	4808					
Motor data										
Values at nominal voltage										
1	Nominal voltage	V	24	36	48					
2	No load speed	rpm	8345	8175	8352					
3	No load current	mA	680	290	200					
4	Nominal speed	rpm	7845	7673	7844					
5	Nominal torque	mNm	280	280	280					
6	Nominal current	A	10.92	6.97	5.31					
7	Stall torque	mNm	4670.8	4563.1	4599.6					
8	Stall current	A	171.43	109.09	84.21					
9	Max. efficiency	%	87.8	90.0	90.5					
10	Terminal resistance	Ω	0.14	0.33	0.57					
11	Terminal inductance	mH	0.041	0.092	0.184					
12	Torque constant	mNm/A	27.35	41.94	54.75					
13	Speed constant	rpm/V	349	228	174					
14	Speed/torque gradient	rpm/mNm	2	2	2					
15	Mechanical time constant	ms	2.6	2.6	2.7					
16	Rotor inertia	gcm^2	140	140	140					

17	Thermal resistance housing-ambient	2.7 K/W
18	Thermal resistance winding-housing	1.1 K/W
19	Thermal time constant winding	48 s
20	Thermal time constant motor	1100 s
21	Ambient temprature	-30…+100℃
22	Max. permissible winding temperature	+125℃
23	Max. permissible speed	17500 rpm
24	Axial play at axial load <10N	0 mm
	>10N	max. 0.3 mm
25	Radial play	preloaded
26	Max. axial load (dynamic)	9 N
27	Max.force for press fits (static)	170 N
	(static, shaft supported)	4500 N
28	Max. radial loading, 5mm from flange	80 N
29	Number of pole pairs	1
30	Number of phases	3
31	Weight of motor	928 g

Operating Range

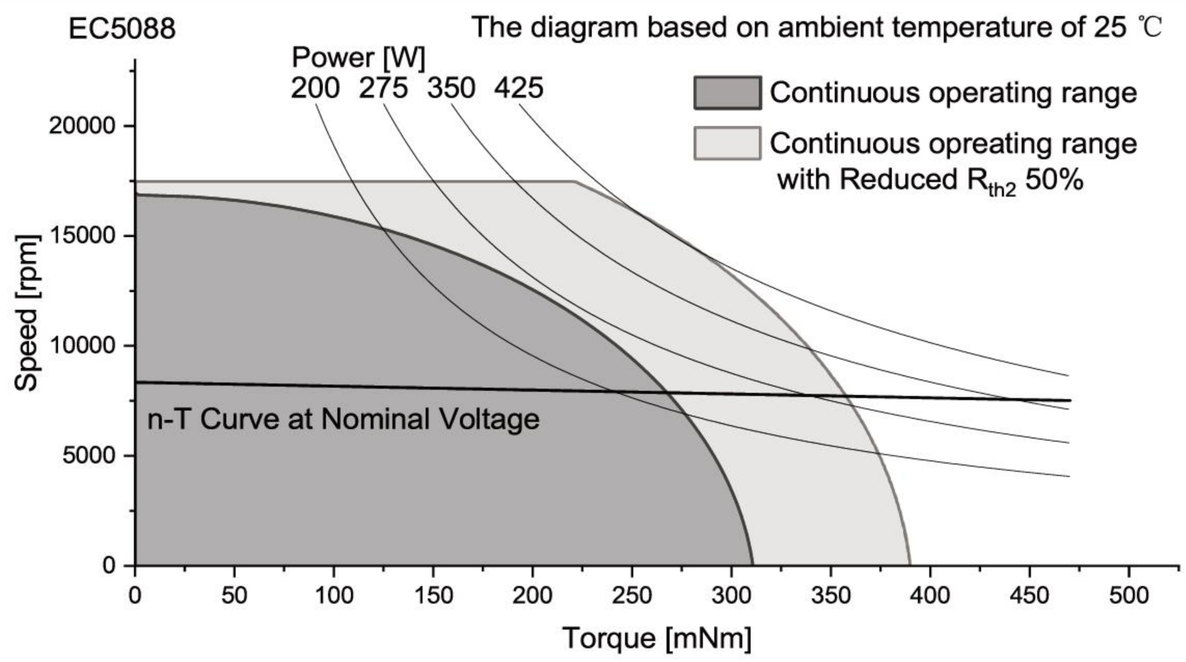

Connection

Conection A (Sensor) PTFE

Pin 1	Motor winding MB	AWG20	Green
Pin 2	Vhall 3-18 VDC	AWG26	Red
Pin 3	Hall sensor HA	AWG26	Yellow
Pin 4	Hall sensor HC	AWG26	Blue
Pin 5	Motor winding MA	AWG20	Yellow
Pin 6	Motor winding MC	AWG20	Blue
Pin 7	GND	AWG26	Black
Pin 8	Hall sensor HB	AWG26	Green

Conector
Molex5557-8P

Conection B (Sensorless) PTFE

Pin 1	Motor winding MA	AWG20	Yellow
Pin 2	Motor winding MB	AWG20	Green
Pin 3	Motor winding MC	AWG20	Blue

Configuration

Performance: Customized in the continuous operating range
Ball bearing: Preload
Flange: Standard frange front&back/customize the frange
Shaft: Length/Diameter/Cut face/double shaft/hollow shaft
Leadwire: PVC/Silicon/Teflon/UL No/Dimension/length
Connector: JST/MOLEX/TE