vishan 唯川
BLDC MOTOR & CONTROLLER

PRODUCT CATALOGUE

Perfect customized Slotless BLDC motors, gearheads, encoders, controllers

Silent, Reliable, Efficient, Powerful

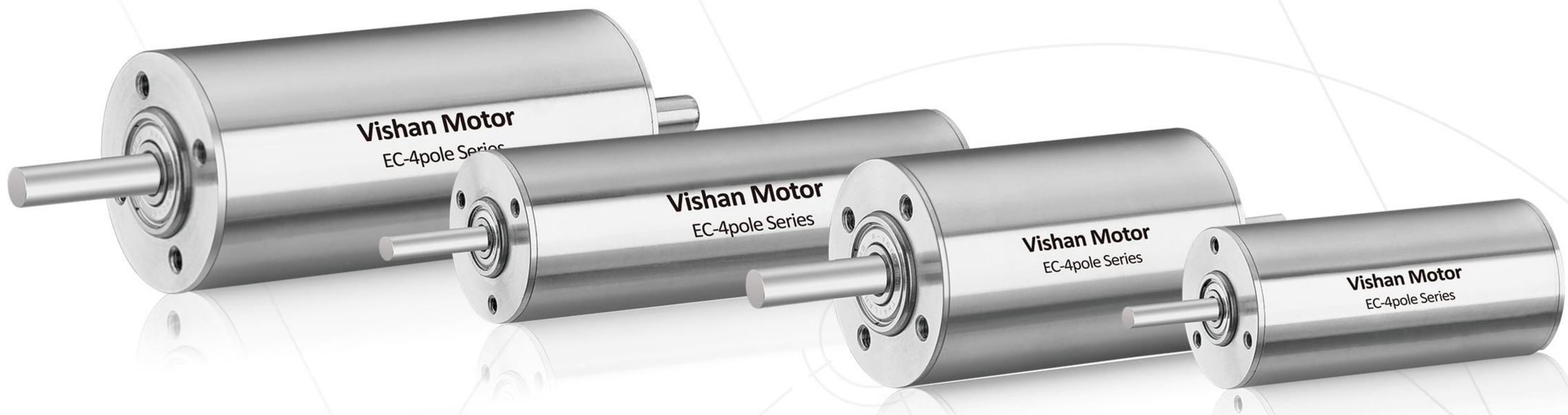

www.vishanmotor.com

Creative ideas for drive

2025

We Specialize in Motor and control technology

We provide
worldwide, Perfectly engineered miniature Brushless motors, Gearheads, encoders variety of possible combinations, and offer flexible customized services which suit your needs.

Product line 2
Production&Quality 8
Applications&markets 11
Brushless DC Motors-Slotless Winding 12
Brushless DC Motors-Slotted Winding 78
Gearheads 117
Controllers 131
Encoders 137

We are Vishan

Since 2012,Vishan has started to develop and produce the miniature motors and precision motion contorol technologies for performance-critical applications which could save,improve and enhance lives.
Our products including Slotless and Slotted Brushless DC motors,Gearheads,Encoders and controllers for the industrial automation,power tools,medical technology and robotics place.
We provide the best products and custom engineering services from customized small volumes to series production to ensure a perfect fit for your applications.

OUR PRODUCTS OVERVIEW

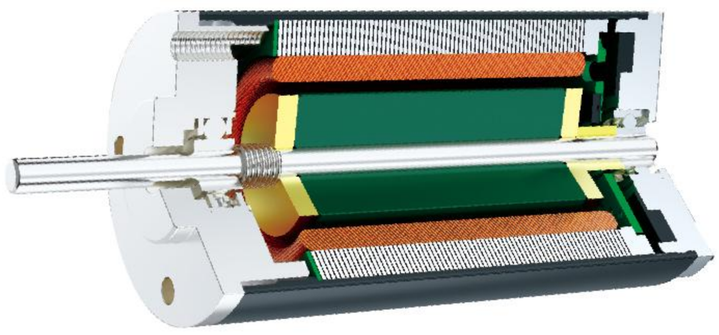

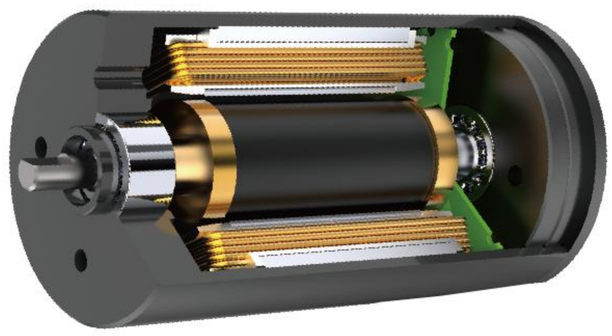

Brushless DC motor
Slotless Winding

Brushelss DC motors are electronically commutated, the size is from φ6-50mm, with up to 300W

Main Characteristics

-No cogging torque
-Very long lifetime
-Well control properties
-Speed up to 60,000rpm

Product lines

-EC SERIES Basic product range
-ECD series Electronics integrated
-ECH Series Provide high speed performance

Brushless DC motor
Slotless Winding-4Pole

The innovative 4-pole magnet and winding design can greatly increase the power density of the motor, with sizes from φ22mm to 30mm with up to 200W

Main Characteristics

-Ultra high power density
-Ultra High efficienty
-High reliability
-Low noise
-No Cogging
-Low inductance

Product lines

-EC-4pole 22 series
-EC-4pole 28 series
-EC-4pole 30 series

Brushless DC motor
Slotted Winding

The slotted structure design concentrates the magnetic field, improving efficiency and torque density, allowing the motor to achieve greater output in a smaller volume.

Main Characteristics

-Cost effective
-Large starting torque
-Low noise
-Good heat dissipation
-Long operational lifetime
-Customizable

Product lines

-BL SERIES: Basic product range
-BD series: Electronics integrated
-BF Series: External rotor structure & Electronics integrated
-ECI Series： Multipole internal rotor design

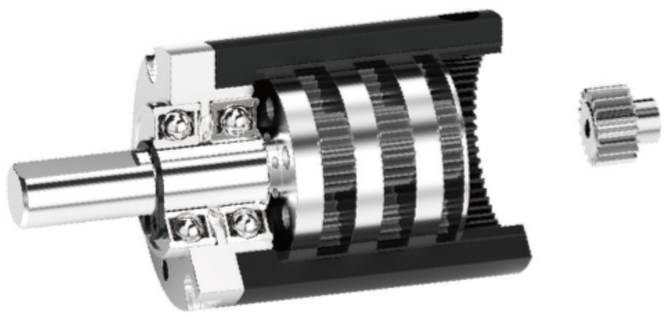

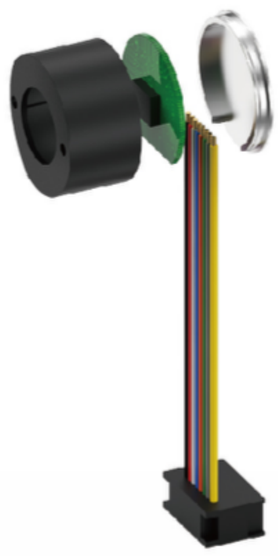

Planetary gearbox

Through the high-precision planetary gearbox design and flexible gear material, internal structure and grease customization, it can meet the design requirements of the non-pass to the greatest extent, with dimensions ranging from φ8mm to 42mm and maximum torque up to 20Nm

Product lines

Planetary gearhead
Screws planetary gearhead

Encoder

The encoder range covers magnetic encoders, optical encoders, and is available in multiturn or singleturn absolute solutions in sizes from φ 8 mm to 24 mm

Product lines

Magnetic encoders
Optical encoders
High position accuracy, repeability and high signal quality.
Multifarious function customization

Controller

Based on the hardware and software solutions of our own drive team, we can provide motor control solutions for motors with hallsensors, without Hallsensors, and servo motors. It is mainly suitable for working voltages ranging from 4.5VDC to 52VDC, with a maximum current up to 30A.

Product lines:

For motor with hallsensor
For motor without hallsensor
Motion control

We continue to innovate to create high precision and performance in the field of micro-kinematics, based on a series of standard products, through in-depth communication, to understand your specific needs and provide professional, flexible customization and fast sample delivery services for specific applications.

Glance of product line

Brushless DC Motors-Slotless

EC Series
2Pole winding Technology
φ6mm-50mm
Maximum power up to 260W
Max. speed up to 30,000rpm

ECD Series
2Pole winding Technology
Electronics integrated
φ12mm-36mm
Maximum rated current up to 3A
Max. speed up to 30,000rpm

ECH Series
2Pole winding Technology
High speed design
φ13mm-22mm
Max. speed up to 60,000rpm

EC-4Pole Series
4Pole winding Technology
φ22mm-30mm
Maximum power up to 200W
Max. speed up to 20,000rpm

Brushless DC Motors-Slotted

BL Series
Inner running structure
φ16mm-36mm
Maximum power up to 30W
Max. speed up to 20,000rpm

BD Series
Inner running structure
Electronics integrated
φ16mm-42mm
Maximum rated current up to 3A
Max. speed up to 15,000rpm

BF Series
External rotor structure
Electronics integrated
φ32mm-68mm
Max. speed up to 12,000rpm
Maximum rated current up to 3A

ECI Series
Multipole internal rotor design
φ40mm-58mm
Maximum power up to 120W
Max. speed up to 10,000rpm

Planetary gearhead Series

PG Series
High precision transmission structure
φ6mm-40mm
Maximum torque up to 20Nm

GS Series
Ball screws available
φ16mm-30mm
Highly efficient
Not self-locking

Vishan Encoders

Magnetic encoders
φ8mm-24mm
Incremental encoders
Single turn absolute encoders
Multiturn absolute encoders

Optical encoders
φ22mm-28mm
Maximum 4096PPR
High accuracy

Vishan controllers

Speed Controller
Sutiable for motor with hallsensor or without hallsensor

Motion Controller
Support incremental encoder and linear Hall Support RS485 MODBUS-RTU protocol Position, speed, current, three closed-loop control Set the parameters of the upper computer

How we delivery our flexible service

we hope to understand your actual needs, whether it is electrical performance indicators, dimensions, use environment or working methods.
In order to find the most suitable single product or combination solution flexiblity in our product system, we can also provide complete development and customization services according to specific indicators, and we can provide samples and follow-up mass production efficiency. We will always think from the customer's point of view.

Basic products:

We have materials in stock for standard products in order to make fast delivery.

Gear
Planetary Gearhead
Screw Drive

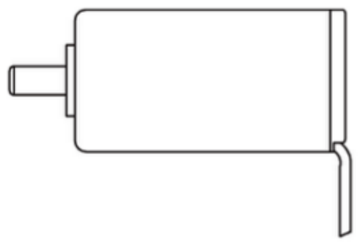

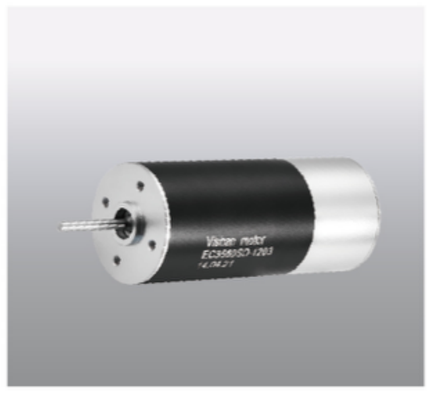

Motor
Brushless DC Motors-Slotles
Brushless DC Motors-Slotted

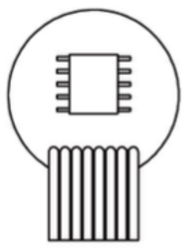

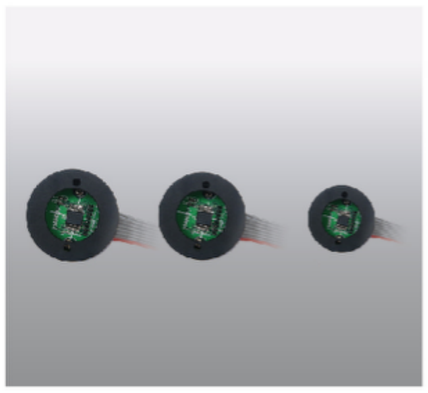

Encoder
Incremental encoders
Absolute encloders
Optical encoders

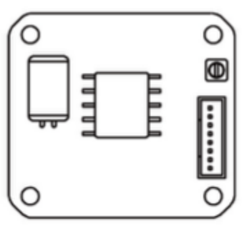

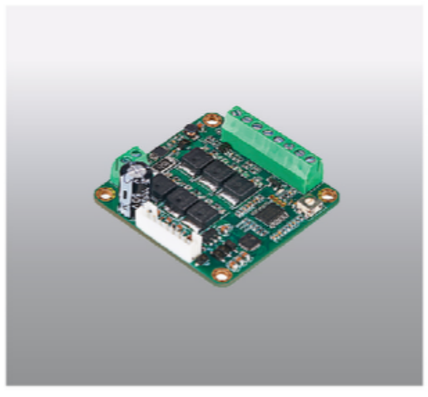

Controller
Speed Control
Motion Control

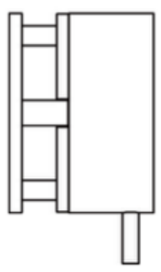

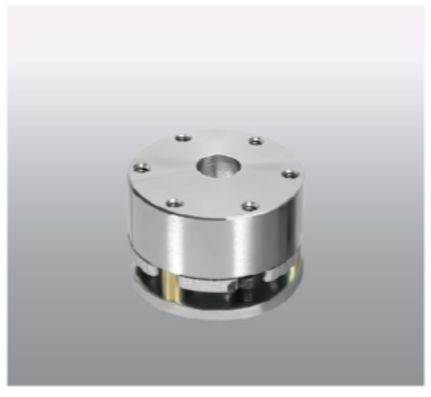

Brake
ϕ 22mm-37mm
24VDC

Leadwire&connector
JST, Molex connectors
PVC, Teflon, Silicone wires

Product Modifications

Based on our standard products, customized parts are available

Shaft
Diameter
Length
D-Cut
Steps

Bearing
Ball bearing
Stainless steel ball bearing
Grease

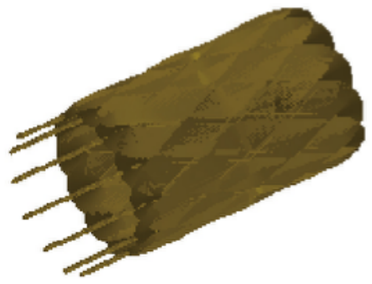

Coil
Operate voltage
Rated speed
Temperature range

Gearhead
Dimensions
Shaft
Grease
Materials

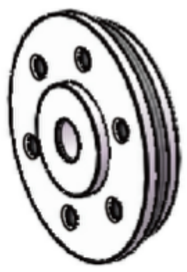

Front/back covers
Flange
Screw holes
Special require

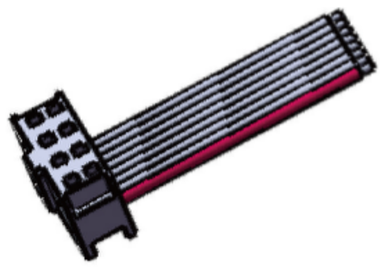

Leadwire
Terminals JST/MOLES/TE
Cables PVC/PTFE/SILICON
Color

We prepare the materials for the standard products and regularly update the stock in order to provide a fast delivery service in case of urgent delivery deadlines. Vishan look forward for your consultation.

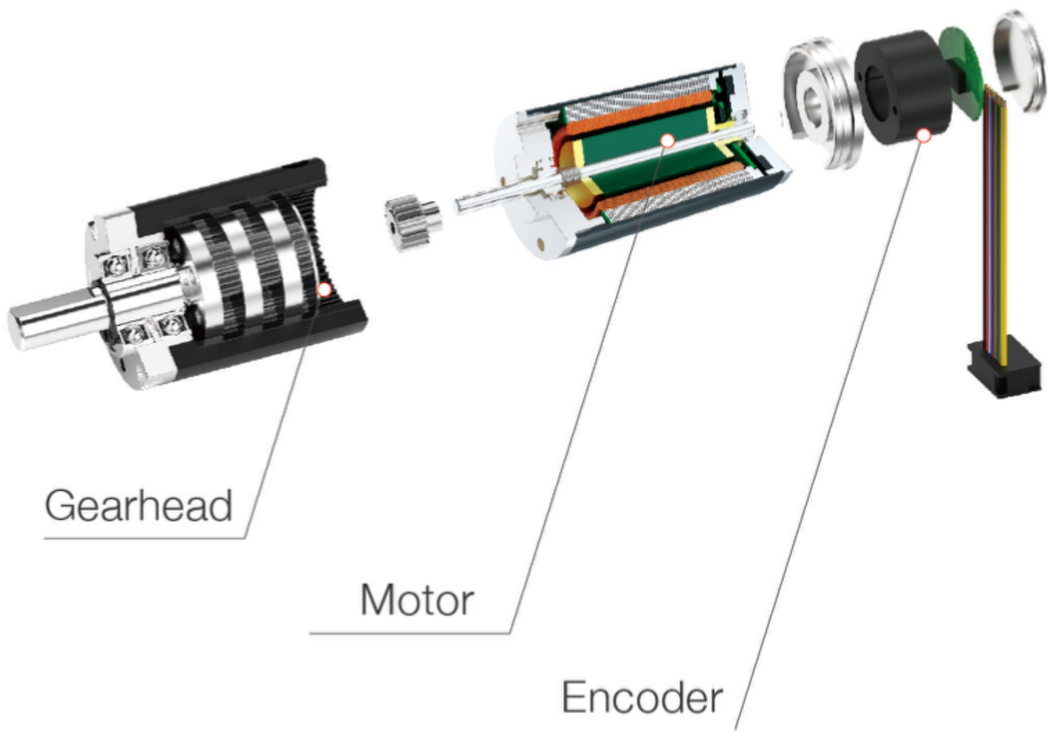

With just a few simple questions, we are able to output a complete customized solution:
operate voltage
Rated speed
Rated torque
Target dimensions
Working: Continuous/Intermittent
Especially for applications with gearboxes,we try to reduce the motor output speed and adjust the gears and grease inside the gearbox to achieve the best performance for your application

Quality without the contemptuous

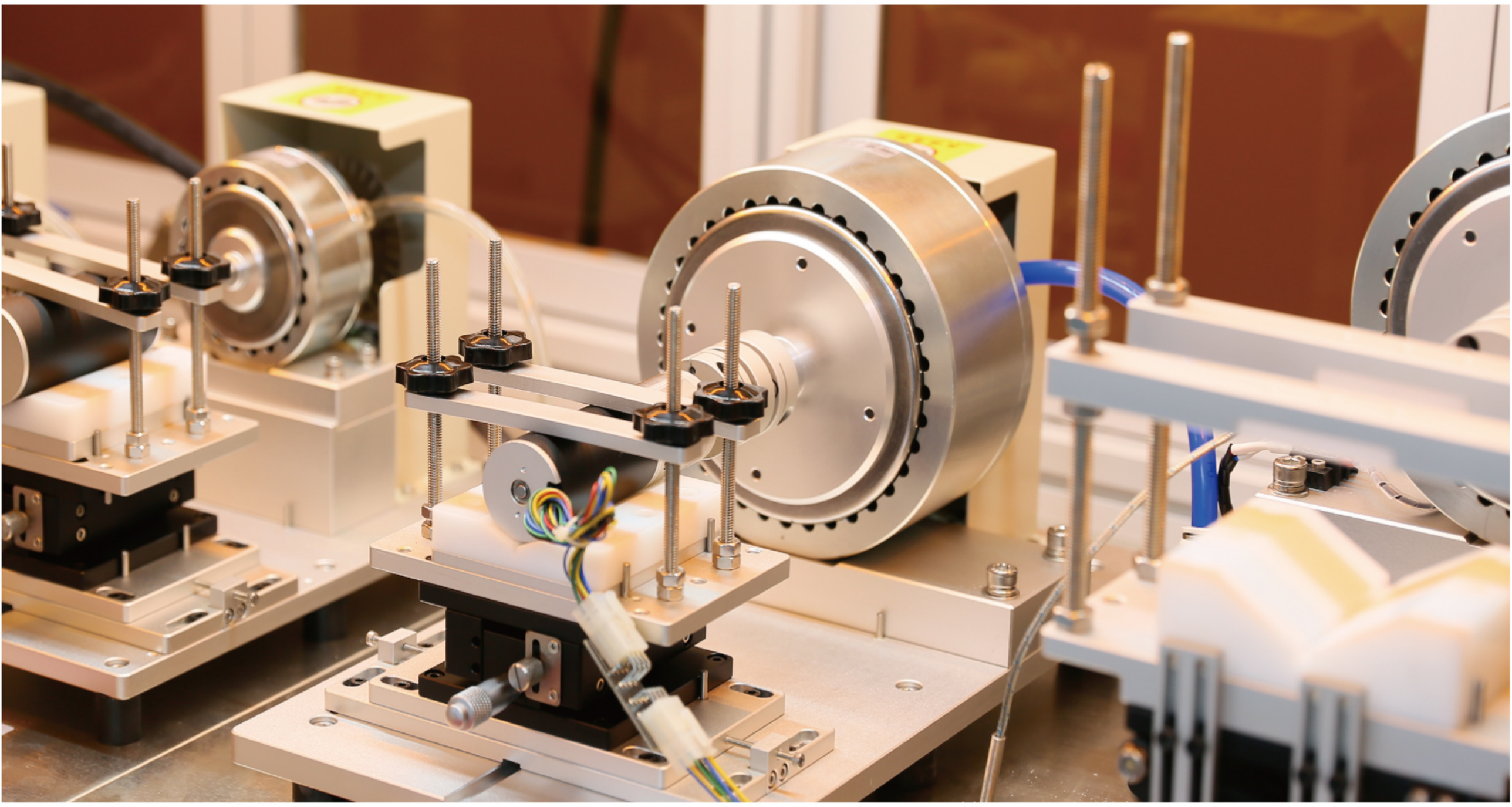

Vishan adheres the concept of quality-first,we with meticulous attention to every aspect of production.
We understand that exceptional quality stems from rigorous management and a relentless pursuit of excellence. Therefore, we have established stringent standards and protocols throughout the production process to ensure that every product is crafted to perfection.

We rely on

customized production and testing equipment to ensure the best performance and quality requirements for our products in R&D and production as well as in testing engineering

Choose the right technology for your application

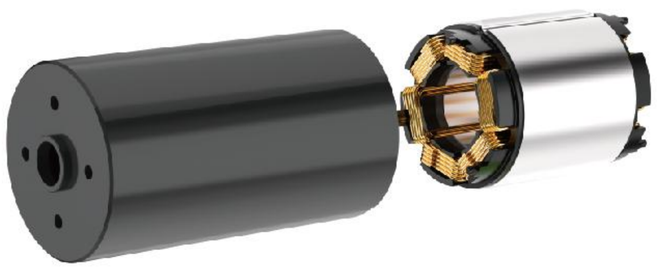

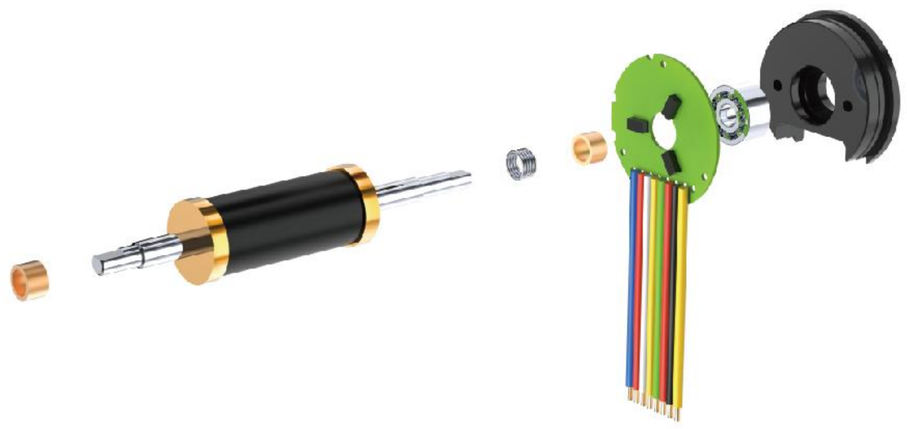

	Slotless Brushless DC motor	**Slotted Brushless** DC motor
Coil	Self-supporting cylindrical coils **Advantages:** No cogging torque Low Iron Loss High efficienty Linear torque/speed ratio	Self-supporting cylindrical coils **Advantages:** No cogging torque Low Iron Loss High efficienty Linear torque/speed ratio
Permanent magnet	Neodymium iron boron Samarium Cobalt **Advantages:** Torque/current is proportional Speed/Voltage is proportional Linear torque/speed ratio	Neodymium iron boron **Advantages:** Torque/current is proportional Speed/Voltage is proportional Linear torque/speed ratio
Brushless Design	There is no brush wear or arcing **Advantages:** Long life time Lower EMI Electronics integrated option	There is no brush wear or arcing **Advantages:** Long life time Lower EMI Electronics integrated option

With ultra-high precision,efficiency and reliability,our motors deliver the power density needed for top performance in a compact package. There are two kinds of designs: slotted and slotless Brushless DC motors, both are suitable configuration is selected for diferent industry applications.

Typical application

Power tools

Electric screw drivers
Electric Scissors
Meat Slicer

Medical&Lab

Dental devices
Surgical equipment
Ventilators
Chemical Analysis

Robotics

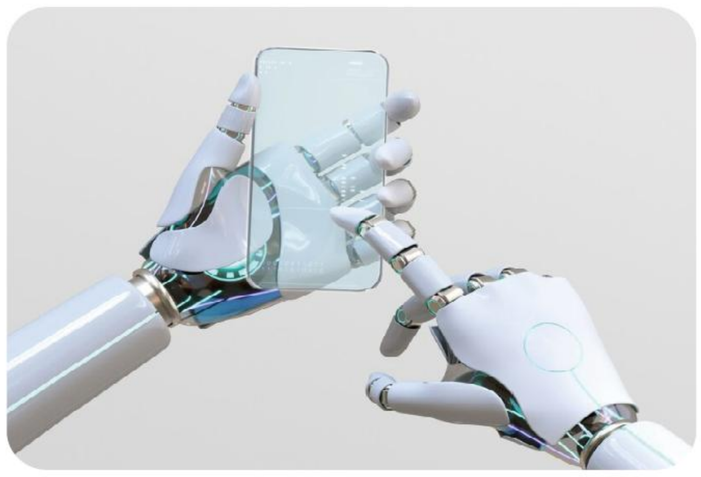

Electric Grippers
Humanoid robots
Service robotis
Exoskeleton

Industrial

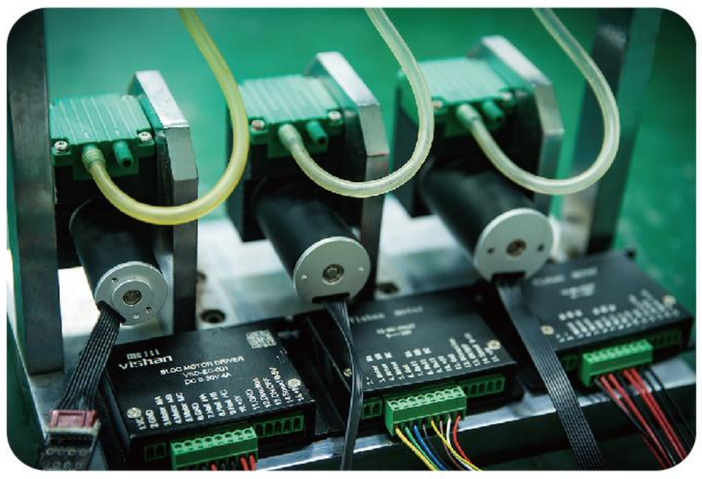

Screw valves
Mini pump
Instrumentation
Machinery equipment

Optical instruments

Automatic focus
Microscopes

Aerospace

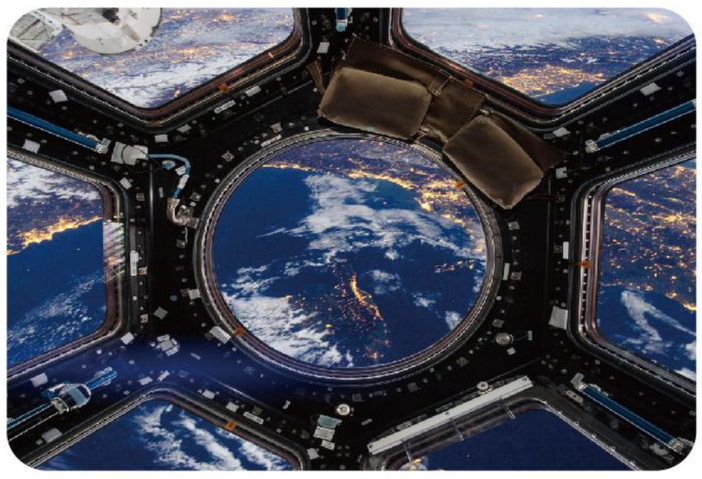

Radar systems
Seat and display adjustments
Angle control systems

Consumer Applications

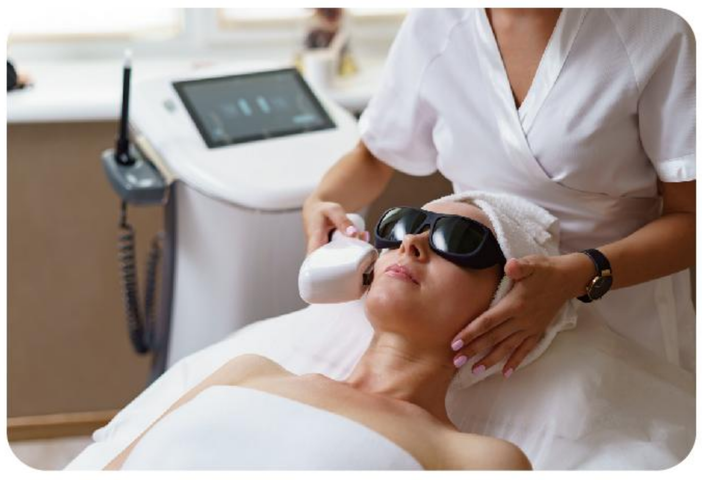

Tattoo Machines
Permanent make-up
Micron needles

Power Seat

High speed train seat

Slotless

Brushless DC motors

Contents

EC SERIES	2Pole winding Technology	P. 13-42
EC-4Pole SERIES	4Pole winding technology	P. 43-51
ECD SERIES	2Pole winding Technology Electronics integrated	P. 53-67
ECH SERIES	2Pole winding Technology High speed design	P. 69-77

SLOTLESS BLDC MOTOR

EC Series

2 Pole winding technology

Model	Dimension (mm)	Nominal Troque (mNm)	Nominal Speed (rpm)	Page
EC0615	Φ6x15	0.3	25000	15
EC0818	Φ8x18	0.8	25000	16
EC1025	Φ10x25	1.5	35000	17
EC1220	Φ12x20	1.5	16000	18
EC1220	Φ12x30	3	20000	19
EC1333	Φ13x33	3.7	21000	20
EC1348	Φ13x48	4.5	25000	21
EC1630	Φ16x30	3.5	20000	22
EC1636	Φ16x36	6	12000	23
EC2040	Φ20x40	10	16000	24
EC2232	Φ22x32	6	10000	25
EC2240	Φ22x40	12	14000	26
EC2248	Φ22x48	18	12000	27
EC2260	Φ22x60	28	14000	28
EC2446	Φ24.5x46	18	12000	29
EC2453	Φ24.5x53	20	14000	30
EC2845	Φ28x45	18	12000	31
EC2854	Φ28x54	35	10000	32
EC2864	Φ28x64	50	10000	33
EC3242	Φ32x42	25	8000	34
EC3260	Φ32x60	50	10000	35
EC3270	Φ32x70	70	8000	36
EC3660	Φ36x60	82	7000	37
EC3670	Φ36x70	120	5000	38
EC4058	Φ40x58	85	7000	39
EC4070	Φ40x70	130	7000	40
EC4088	Φ40x88	200	7000	41
EC5088	Φ50x88	280	7000	42

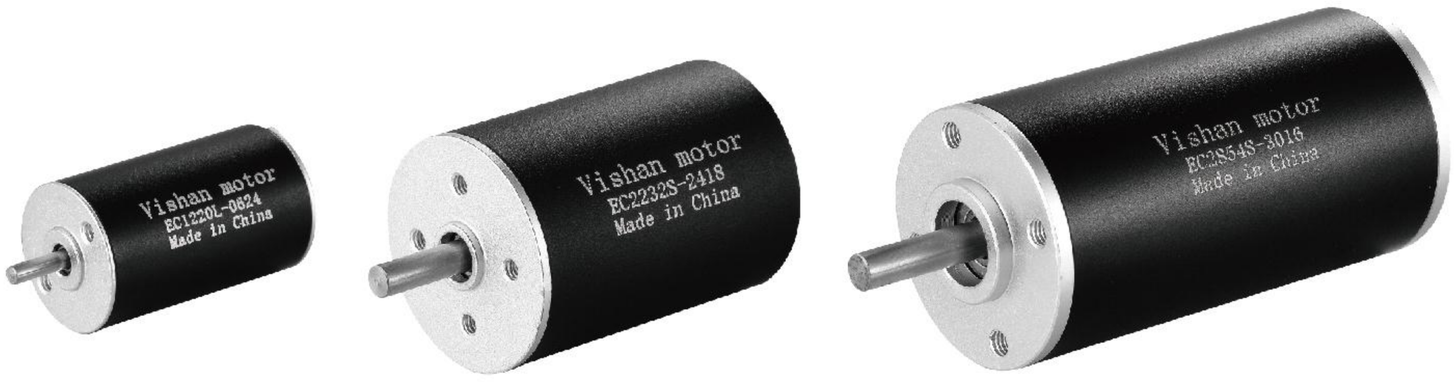

EC SERIES

2Pole Slotless winding technology

The benefits of this new technology are torque and high-speed when compared to same sizing.The lack of cogging,a reduced ripple torque,a linear correlation between speed and torque,low inertia bring performance to greater level in terms of power,dynamics by means of reduced weights and reduced dimensions.of reduced weights and reduced dimensions.

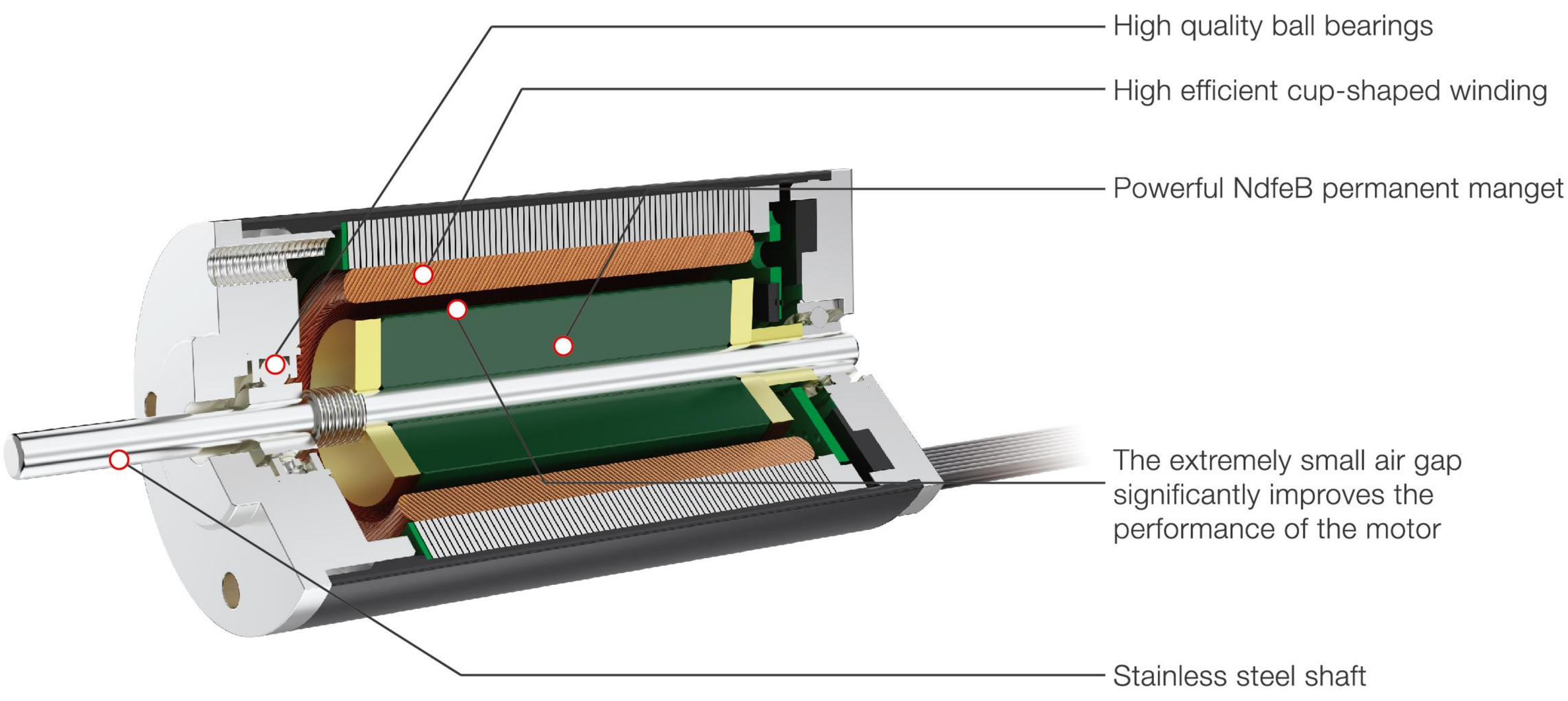

Basic Data:
Diameter: φ6mm-50mmm
Maximum Length: 88mm
Operate Voltage: 6V-48VDC
Maximum Power output:260W
Maximum Permissiblespeed: 30,000rpm
Operate temperature: -30°C-+80°C

Typical features:
High power density
High efficienty
High reliability
Low noise
No Cogging
Low inductance
Good heat dissipation
Long operational lifetime

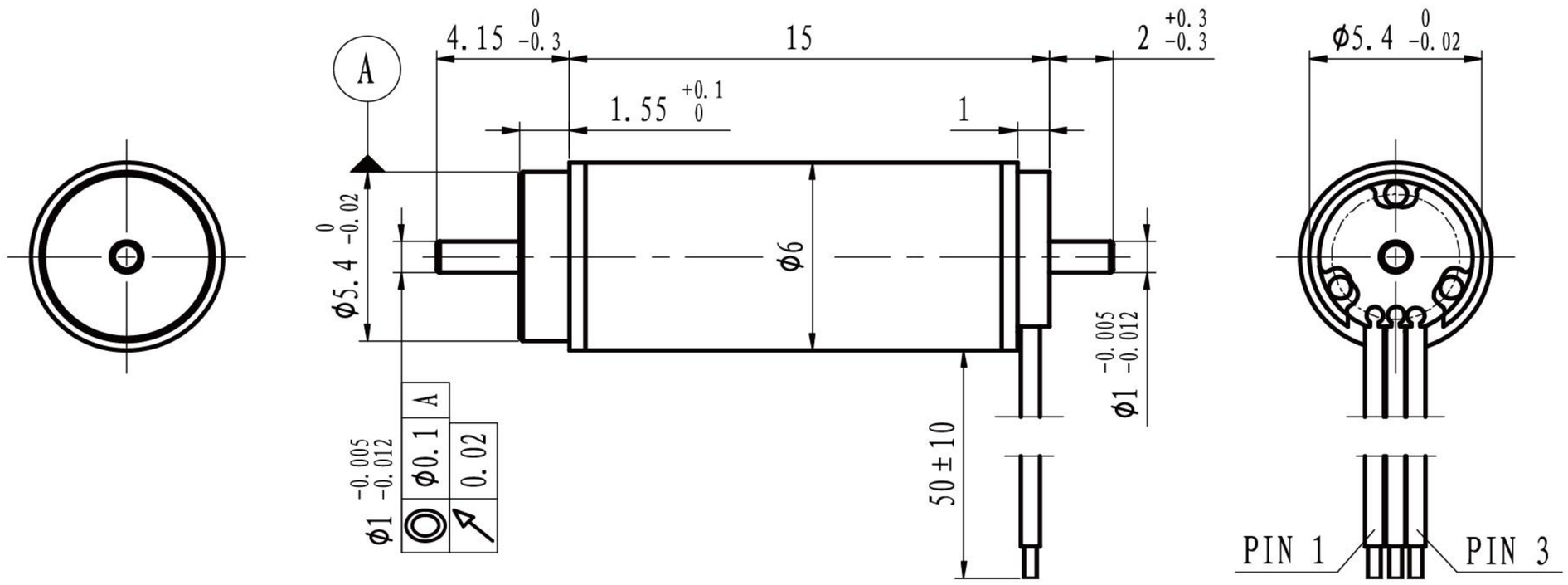

M 3:1

	Sensorless	EC0615L-…	0645	1245						
Motor data										
Values at nominal voltage										
1	Nominal voltage	V	6	12						
2	No load speed	rpm	45931	45633						
3	No load current	mA	80	53						
4	Nominal speed	rpm	26901	25005						
5	Nominal torque	mNm	0.3	0.3						
6	Nominal current	A	0.35	0.19						
7	Stall torque	mNm	0.72	0.66						
8	Stall current	A	0.73	0.36						
9	Max. efficiency	%	44.8	38.1						
10	Terminal resistance	Ω	8.2	33.1						
11	Terminal inductance	mH	0.048	0.195						
12	Torque constant	mNm/A	1.11	2.14						
13	Speed constant	rpm/V	8595	4454						
14	Speed/torque gradient	rpm/mNm	63434	68759						
15	Mechanical time constant	ms	5.3	5.8						
16	Rotor inertia	gcm^2	0.008	0.008						

17	Thermal resistance housing-ambient		90 K/W
18	Thermal resistance winding-housing		17.6 K/W
19	Thermal time constant winding		1.1 s
20	Thermal time constant motor		136 s
21	Ambient temprature		-30…+100℃
22	Max. permissible winding temperature		+125℃
23	Max. permissible speed		80000 rpm
24	Axial play at axial load	<0.15 N	0 mm
		>0.15 N	max. 0.1 mm
25	Radial play		preloaded
26	Max. axial load (dynamic)		0.1 N
27	Max.force for press fits (static)		10 N
	(static, shaft supported)		100 N
28	Max. radial loading, 2mm from flange		2 N
29	Number of pole pairs		1
30	Number of phases		3
31	Weight of motor		2.6 g

Operating Range

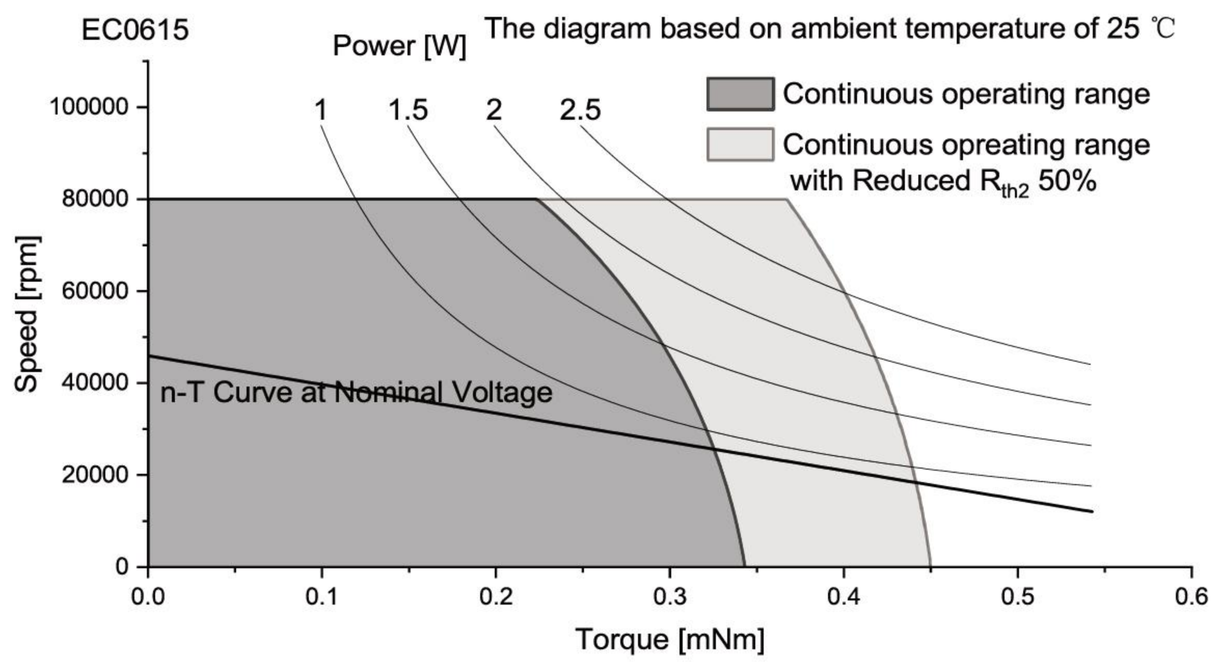

Connection

Conection		PVC	
Pin 1	Motor winding MA	AWG32	yellow
Pin 2	Motor winding MB	AWG32	green
Pin 3	Motor winding MC	AWG32	blue

Configuration

Performance: Customized in the continuous operating range
Ball bearing: Preload
Flange: Standard frange front&back/customize the frange
Shaft: Length/Diameter/Cut face/double shaft/hollow shaft
Leadwire: PVC/Silicon/Teflon/UL No/Dimension/length
Connector: JST/MOLEX/TE

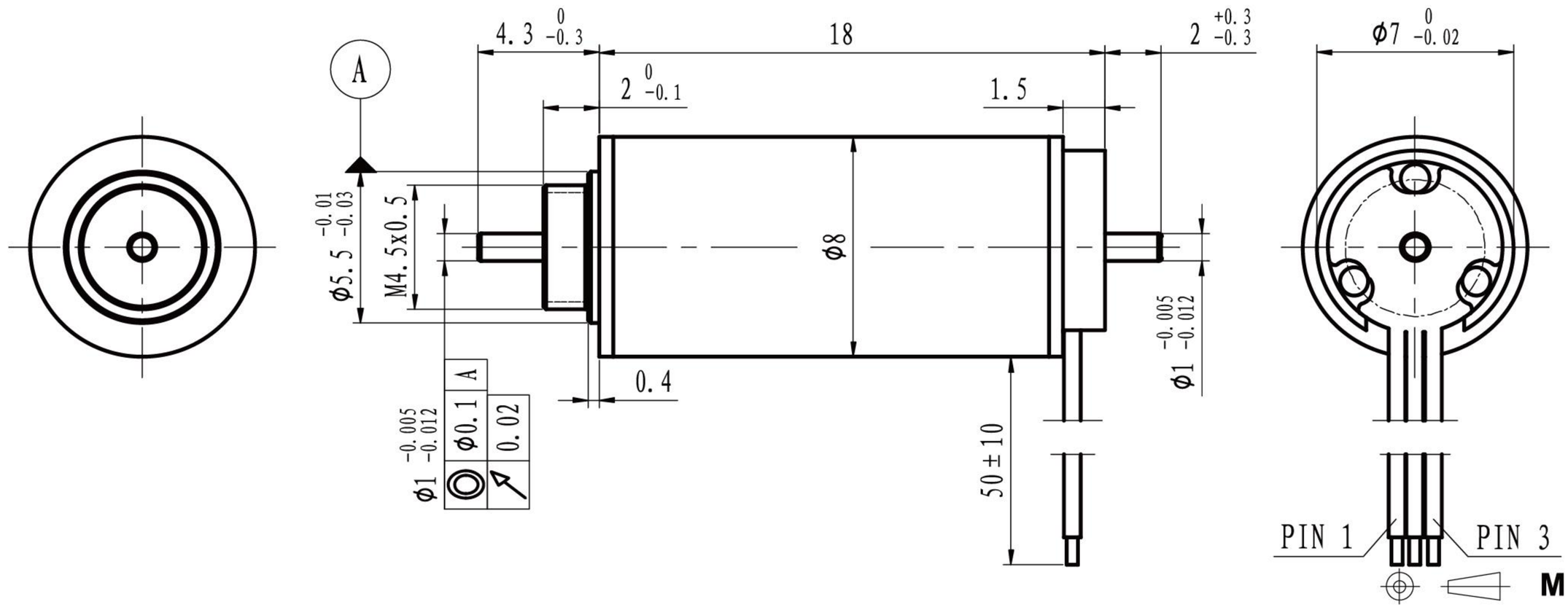

	Sensorless	EC0818L-…	0635	1235
Motor data				
Values at nominal voltage				
1	Nominal voltage	V	6	12
2	No load speed	rpm	35118	34760
3	No load current	mA	110	80
4	Nominal speed	rpm	24754	24125
5	Nominal torque	mNm	0.8	0.8
6	Nominal current	A	0.63	0.35
7	Stall torque	mNm	2.71	2.61
8	Stall current	A	1.88	0.95
9	Max. efficiency	%	57.4	50.3
10	Terminal resistance	Ω	3.2	12.68
11	Terminal inductance	mH	0.033	0.131
12	Torque constant	mNm/A	1.54	3.02
13	Speed constant	rpm/V	6218	3164
14	Speed/torque gradient	rpm/mNm	12955	13294
15	Mechanical time constant	ms	4.3	4.5
16	Rotor inertia	gcm^2	0.032	0.032

17	Thermal resistance housing-ambient	54.0 K/W
18	Thermal resistance winding-housing	20.0 K/W
19	Thermal time constant winding	3.3 s
20	Thermal time constant motor	175.9 s
21	Ambient temprature	-30…+100℃
22	Max. permissible winding temperature	+125℃
23	Max. permissible speed	50000 rpm
24	Axial play at axial load <0.3 N	0 mm
	>0.3 N	max. 0.1 mm
25	Radial play	preloaded
26	Max. axial load (dynamic)	0.2 N
27	Max.force for press fits (static)	10 N
	(static, shaft supported)	100 N
28	Max. radial loading, 2mm from flange	2 N
29	Number of pole pairs	1
30	Number of phases	3
31	Weight of motor	5.4 g

Operating Range

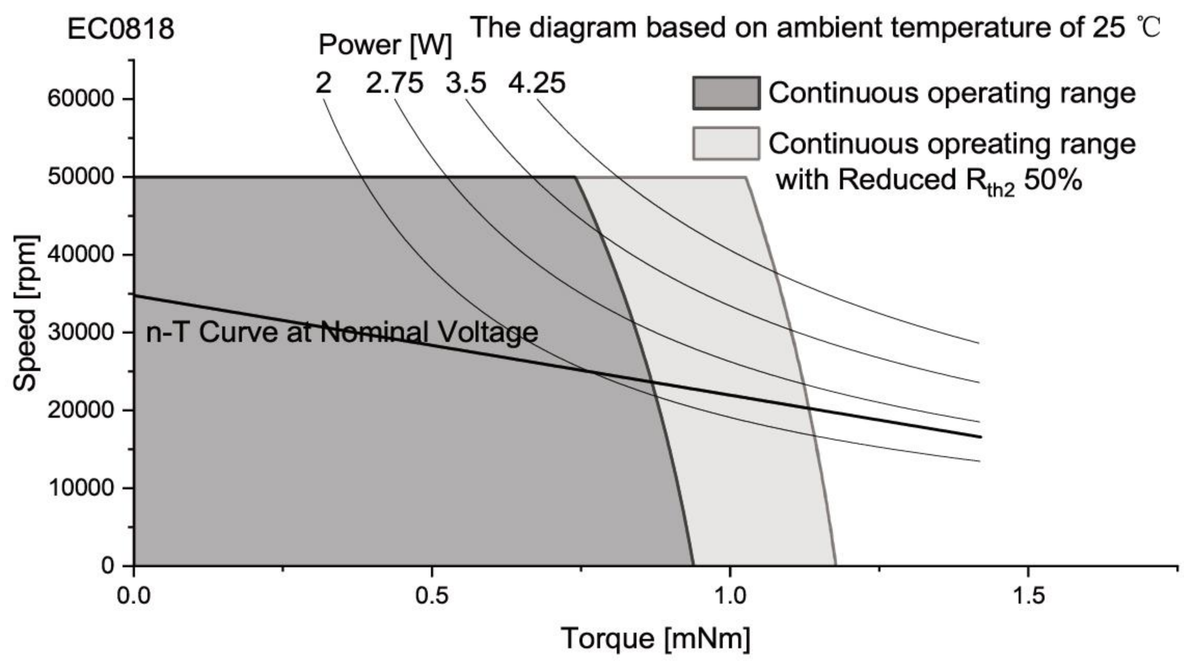

Connection

Conection		PVC	
Pin 1	Motor winding MA	AWG32	yellow
Pin 2	Motor winding MB	AWG32	green
Pin 3	Motor winding MC	AWG32	blue

Configuration

Performance: Customized in the continuous operating range
Ball bearing: Preload
Flange: Standard frange front&back/customize the frange
Shaft: Length/Diameter/Cut face/double shaft/hollow shaft
Leadwire: PVC/Silicon/Teflon/UL No/Dimension/length
Connector: JST/MOLEX/TE

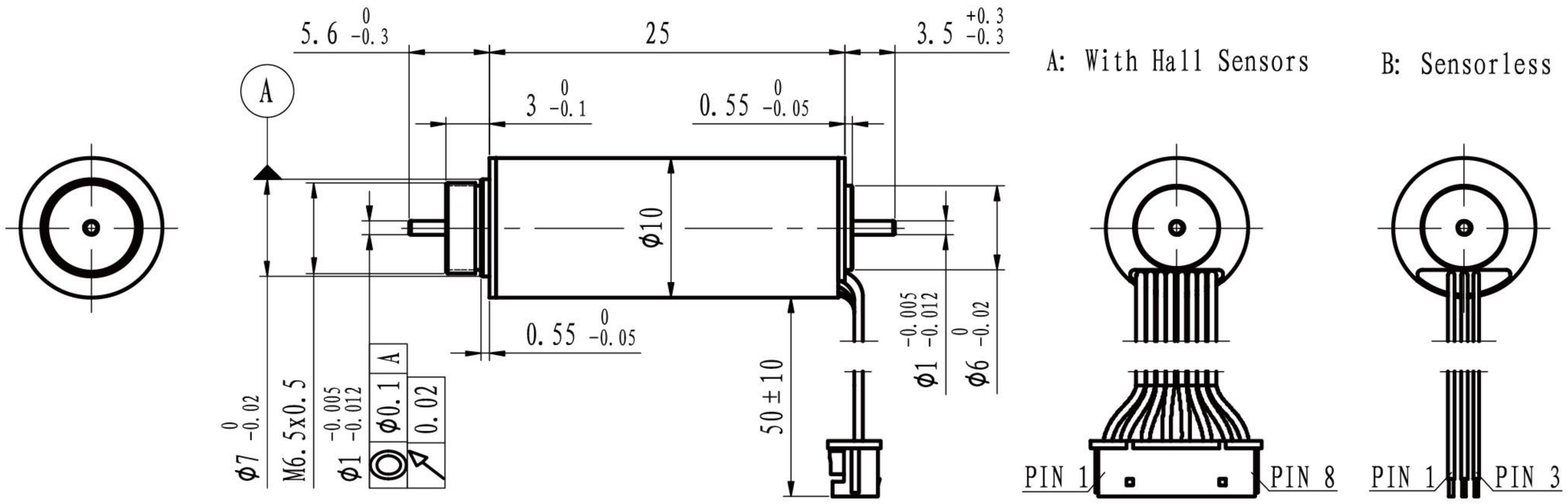

M 1.5:1

	Sensorless With hall sensor	EC1025L-… EC1025S-…	0640	1240						
Motor data										
Values at nominal voltage										
1	Nominal voltage	V	6	12						
2	No load speed	rpm	40183	40617						
3	No load current	mA	163	92						
4	Nominal speed	rpm	34447	35001						
5	Nominal torque	mNm	1.5	1.5						
6	Nominal current	A	1.24	0.64						
7	Stall torque	mNm	10.51	10.85						
8	Stall current	A	7.69	4.03						
9	Max. efficiency	%	73.0	72.1						
10	Terminal resistance	Ω	0.78	2.98						
11	Terminal inductance	mH	0.014	0.056						
12	Torque constant	mNm/A	1.40	2.76						
13	Speed constant	rpm/V	6842	3464						
14	Speed/torque gradient	rpm/mNm	3824	3744						
15	Mechanical time constant	ms	3.1	3.0						
16	Rotor inertia	gcm^2	0.077	0.077						

17	Thermal resistance housing-ambient	42.3 K/W
18	Thermal resistance winding-housing	5.9 K/W
19	Thermal time constant winding	2 s
20	Thermal time constant motor	292 s
21	Ambient temprature	-30…+100℃
22	Max. permissible winding temperature	+125℃
23	Max. permissible speed	50000 rpm
24	Axial play at axial load <0.3 N	0 mm
	>0.3 N	max. 0.1 mm
25	Radial play	preloaded
26	Max. axial load (dynamic)	0.2 N
27	Max.force for press fits (static)	10 N
	(static, shaft supported)	100 N
28	Max. radial loading, 2mm from flange	2 N
29	Number of pole pairs	1
30	Number of phases	3
31	Weight of motor	9.2 g

Operating Range

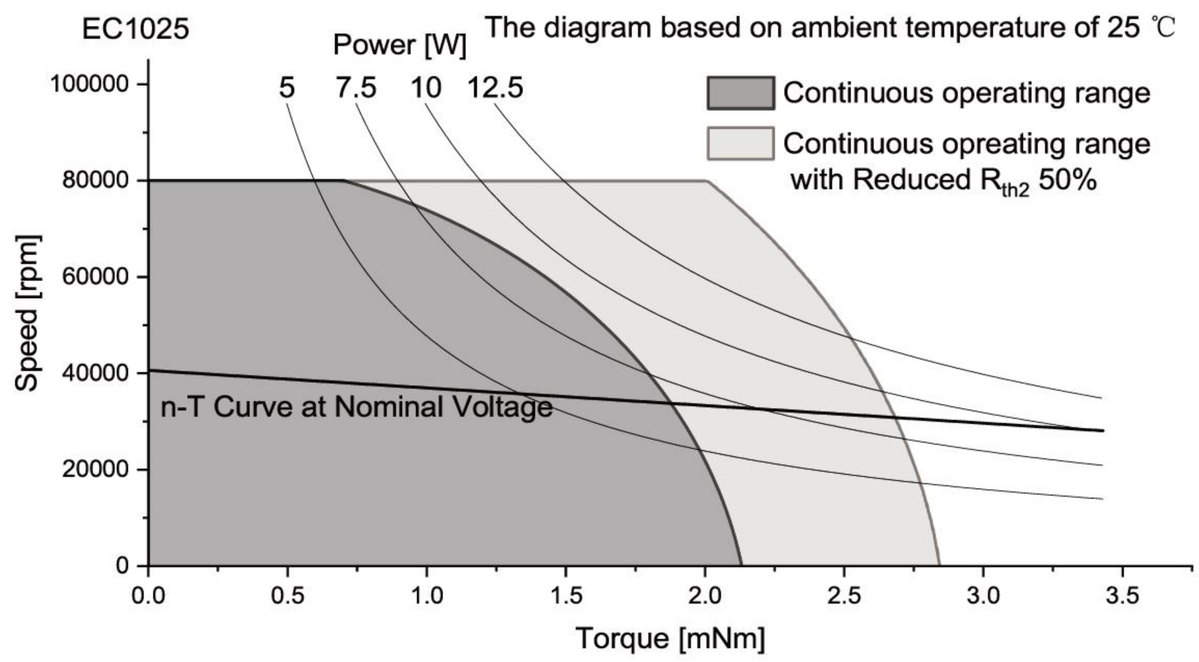

Connection

Conection A (Sensor)		PTFE	
Pin 1	Vhall 3-18 VDC	AWG30	red
Pin 2	Hall sensor HA	AWG30	yellow
Pin 3	Hall sensor HB	AWG30	green
Pin 4	Hall sensor HC	AWG30	blue
Pin 5	GND	AWG30	black
Pin 6	Motor winding MA	AWG30	yellow
Pin 7	Motor winding MB	AWG30	green
Pin 8	Motor winding MC	AWG30	blue
Conector			
MX 1.25-8Y			
Conection B (Sensorless)		PVC	
Pin 1	Motor winding MA	AWG30	yellow
Pin 2	Motor winding MB	AWG30	green
Pin 3	Motor winding MC	AWG30	blue

Configuration

Performance: Customized in the continuous operating range
Ball bearing: Preload
Flange: Standard frange front&back/customize the frange
Shaft: Length/Diameter/Cut face/double shaft/hollow shaft
Leadwire: PVC/Silicon/Teflon/UL No/Dimension/length
Connector: JST/MOLEX/TE

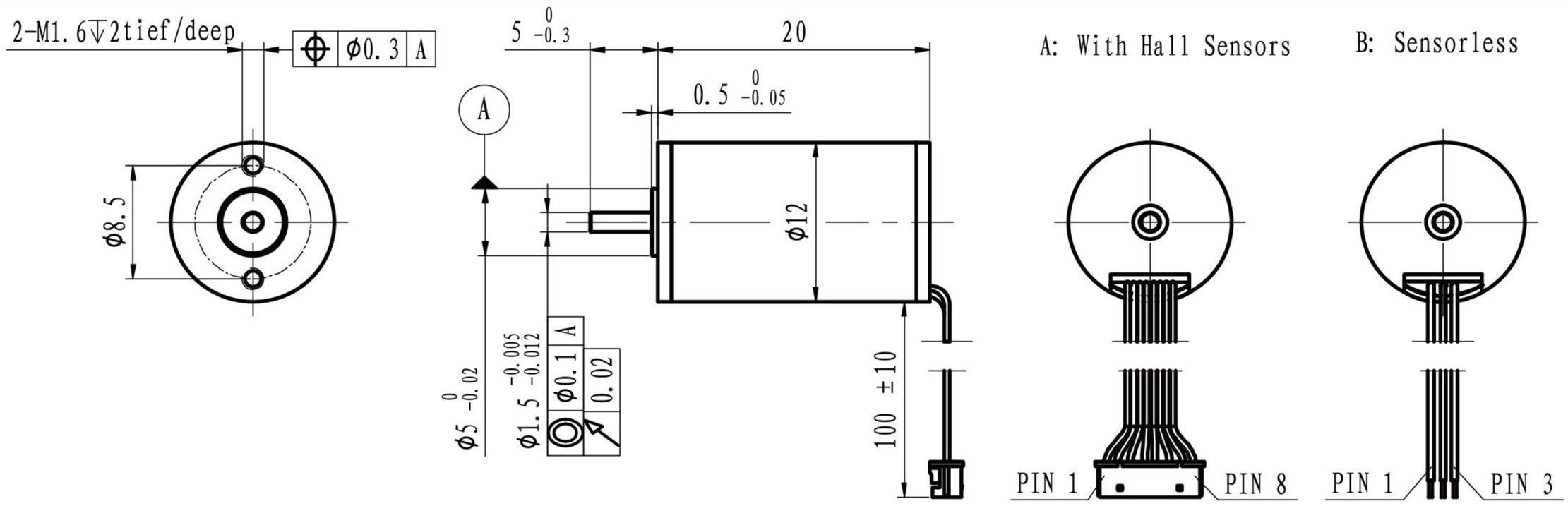

M 1.5:1

	Sensorless With hall sensor	EC1220L-… EC1220S-…	0625	1225						
Motor data										
Values at nominal voltage										
1	Nominal voltage	V	6	12						
2	No load speed	rpm	25130	25280						
3	No load current	mA	69	40						
4	Nominal speed	rpm	16578	16530						
5	Nominal torque	mNm	1.5	1.5						
6	Nominal current	A	0.75	0.38						
7	Stall torque	mNm	4.41	4.33						
8	Stall current	A	2.07	1.03						
9	Max. efficiency	%	66.8	64.5						
10	Terminal resistance	Ω	2.9	11.6						
11	Terminal inductance	mH	0.19	0.76						
12	Torque constant	mNm/A	2.20	4.36						
13	Speed constant	rpm/V	4333	2191						
14	Speed/torque gradient	rpm/mNm	5701	5834						
15	Mechanical time constant	ms	10.1	10.4						
16	Rotor inertia	gcm^2	0.17	0.17						

17	Thermal resistance housing-ambient	38.3 K/W
18	Thermal resistance winding-housing	9.6 K/W
19	Thermal time constant winding	5 s
20	Thermal time constant motor	196 s
21	Ambient temprature	-30…+100℃
22	Max. permissible winding temperature	+125℃
23	Max. permissible speed	50000 rpm
24	Axial play at axial load <0.8 N	0 mm
	>0.8 N	max. 0.3 mm
25	Radial play	preloaded
26	Max. axial load (dynamic)	0.3 N
27	Max.force for press fits (static)	11 N
	(static, shaft supported)	200 N
28	Max. radial loading, 5mm from flange	4.3 N
29	Number of pole pairs	1
30	Number of phases	3
31	Weight of motor	9.8 g

Operating Range

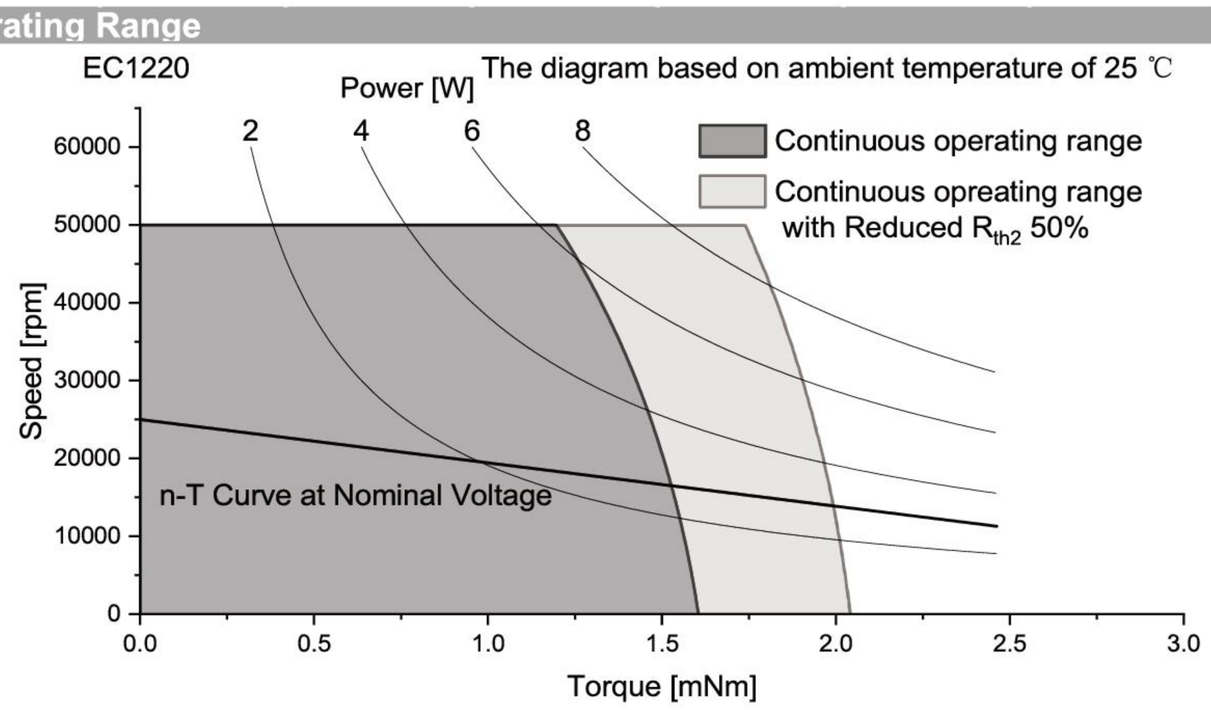

Connection

Conection A (Sensor)		PTFE	
Pin 1	Vhall 3-18 VDC	AWG30	red
Pin 2	Hall sensor HA	AWG30	yellow
Pin 3	Hall sensor HB	AWG30	green
Pin 4	Hall sensor HC	AWG30	blue
Pin 5	GND	AWG30	black
Pin 6	Motor winding MA	AWG30	yellow
Pin 7	Motor winding MB	AWG30	green
Pin 8	Motor winding MC	AWG30	blue
Conector			
MX 1.25-8Y			
Conection B (Sensorless)		PVC	
Pin 1	Motor winding MA	AWG30	yellow
Pin 2	Motor winding MB	AWG30	green
Pin 3	Motor winding MC	AWG30	blue

Configuration

Performance: Customized in the continuous operating range
Ball bearing: Preload
Flange: Standard frange front&back/customize the frange
Shaft: Length/Diameter/Cut face/double shaft/hollow shaft
Leadwire: PVC/Silicon/Teflon/UL No/Dimension/length
Connector: JST/MOLEX/TE

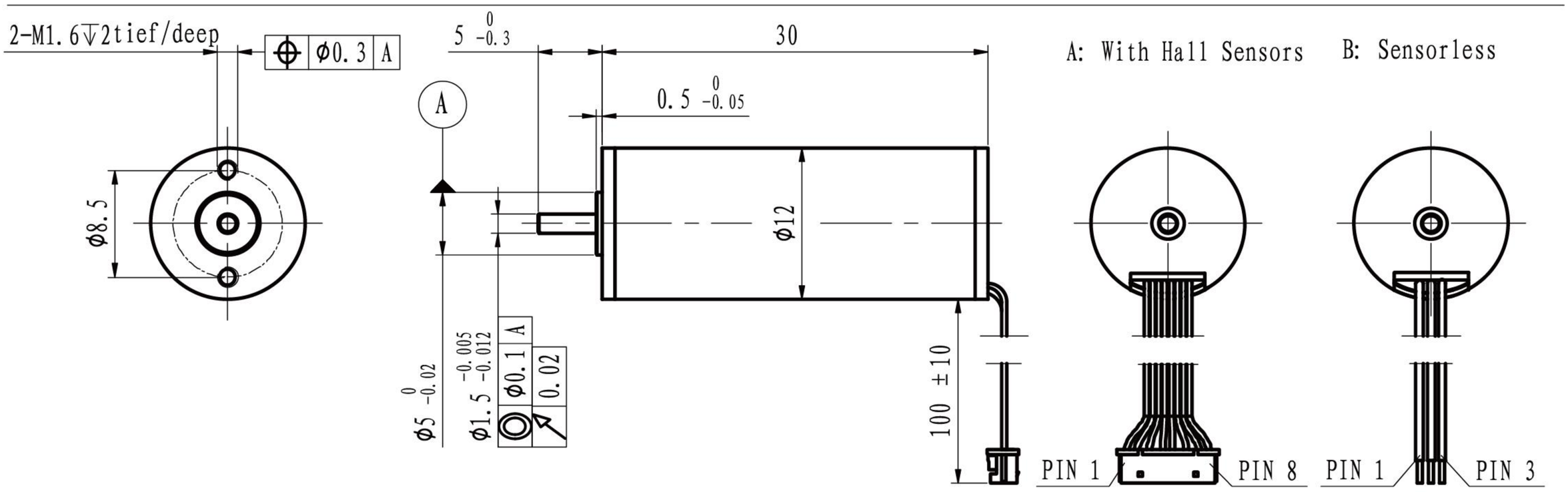

M 1.5:1

	Sensorless With hall sensor	EC1230L-… EC1230S-…	0625	0925	1225					
Motor data										
Values at nominal voltage										
1	Nominal voltage	V	6	9	12					
2	No load speed	rpm	25310	25100	24930					
3	No load current	mA	122	90	72					
4	Nominal speed	rpm	20689	20565	20449					
5	Nominal torque	mNm	3	3	3					
6	Nominal current	A	1.47	0.98	0.74					
7	Stall torque	mNm	16.43	16.61	16.69					
8	Stall current	A	7.50	5.03	3.77					
9	Max. efficiency	%	76.1	75.0	74.3					
10	Terminal resistance	Ω	0.8	1.79	3.18					
11	Terminal inductance	mH	0.02	0.04	0.08					
12	Torque constant	mNm/A	2.23	3.36	4.51					
13	Speed constant	rpm/V	4288	2840	2118					
14	Speed/torque gradient	rpm/mNm	1540	1512	1494					
15	Mechanical time constant	ms	5.2	5.1	5.0					
16	Rotor inertia	gcm^2	0.32	0.32	0.32					

17	Thermal resistance housing-ambient		28.4 K/W
18	Thermal resistance winding-housing		7.1 K/W
19	Thermal time constant winding		4 s
20	Thermal time constant motor		240 s
21	Ambient temprature		-30…+100℃
22	Max. permissible winding temperature		+125℃
23	Max. permissible speed		50000 rpm
24	Axial play at axial load	<0.8 N	0 mm
		>0.8 N	max. 0.3 mm
25	Radial play		preloaded
26	Max. axial load (dynamic)		0.3 N
27	Max.force for press fits (static)		11 N
	(static, shaft supported)		200 N
28	Max. radial loading, 5mm from flange		4.3 N
29	Number of pole pairs		1
30	Number of phases		3
31	Weight of motor		16.3 g

Operating Range

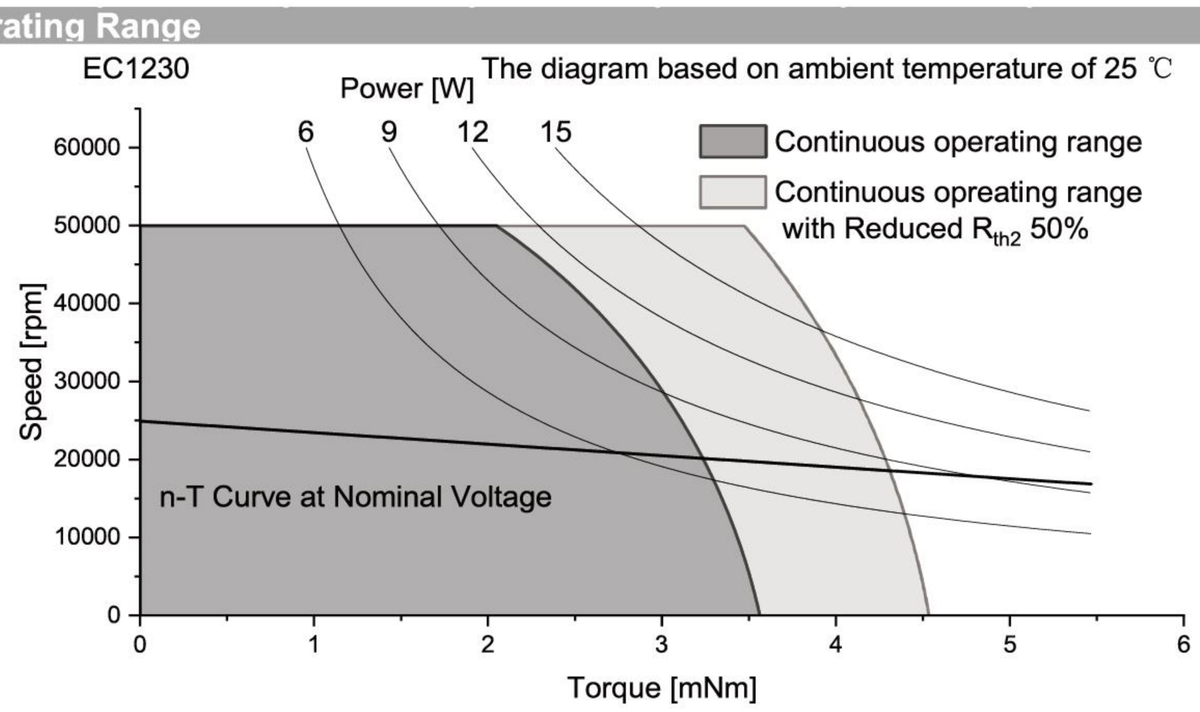

Connection

Conection A (Sensor)		PTFE	
Pin 1	Vhall 3-18 VDC	AWG30	red
Pin 2	Hall sensor HA	AWG30	yellow
Pin 3	Hall sensor HB	AWG30	green
Pin 4	Hall sensor HC	AWG30	blue
Pin 5	GND	AWG30	black
Pin 6	Motor winding MA	AWG30	yellow
Pin 7	Motor winding MB	AWG30	green
Pin 8	Motor winding MC	AWG30	blue
Conector			
MX 1.25-8Y			
Conection B (Sensorless)		PVC	
Pin 1	Motor winding MA	AWG30	yellow
Pin 2	Motor winding MB	AWG30	green
Pin 3	Motor winding MC	AWG30	blue

Configuration

Performance: Customized in the continuous operating range
Ball bearing: Preload
Flange: Standard frange front&back/customize the frange
Shaft: Length/Diameter/Cut face/double shaft/hollow shaft
Leadwire: PVC/Silicon/Teflon/UL No/Dimension/length
Connector: JST/MOLEX/TE

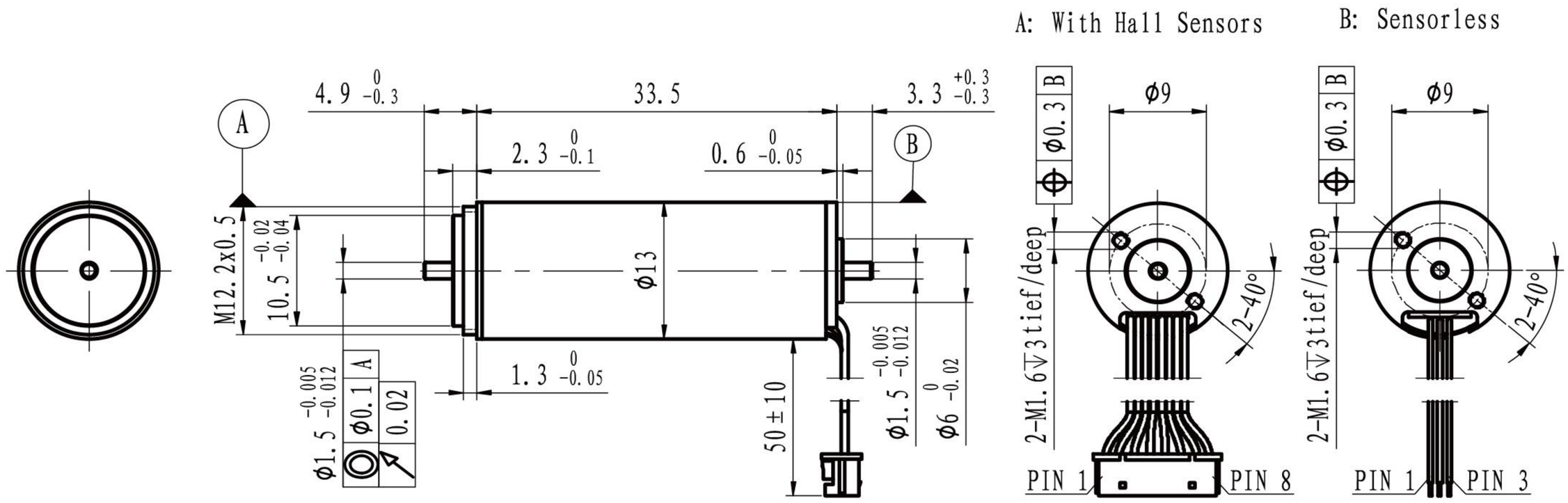

M 1.2:1

	Sensorless With hall sensor	EC1333L-… EC1333S-…	0624	1224	2424					
Motor data										
Values at nominal voltage										
1	Nominal voltage	V	6	12	24					
2	No load speed	rpm	24011	24430	24821					
3	No load current	mA	270	160	100					
4	Nominal speed	rpm	21236	21695	22040					
5	Nominal torque	mNm	3.7	3.7	3.7					
6	Nominal current	A	1.85	0.97	0.51					
7	Stall torque	mNm	32.02	33.05	33.02					
8	Stall current	A	13.95	7.36	3.77					
9	Max. efficiency	%	74.1	72.7	70.1					
10	Terminal resistance	Ω	0.43	1.63	6.36					
11	Terminal inductance	mH	0.014	0.055	0.208					
12	Torque constant	mNm/A	2.34	4.59	8.99					
13	Speed constant	rpm/V	4081	2081	1062					
14	Speed/torque gradient	rpm/mNm	750	739	752					
15	Mechanical time constant	ms	2.8	2.8	2.8					
16	Rotor inertia	gcm^2	0.36	0.36	0.36					

17	Thermal resistance housing-ambient	27.5 K/W
18	Thermal resistance winding-housing	10.7 K/W
19	Thermal time constant winding	8.2 s
20	Thermal time constant motor	275 s
21	Ambient temprature	-30…+100℃
22	Max. permissible winding temperature	+125℃
23	Max. permissible speed	50000 rpm
24	Axial play at axial load <0.8 N	0 mm
	>0.8 N	max. 0.3 mm
25	Radial play	preloaded
26	Max. axial load (dynamic)	0.3 N
27	Max.force for press fits (static)	11 N
	(static, shaft supported)	200 N
28	Max. radial loading, 5mm from flange	4.3 N
29	Number of pole pairs	1
30	Number of phases	3
31	Weight of motor	26.9 g

Operating Range

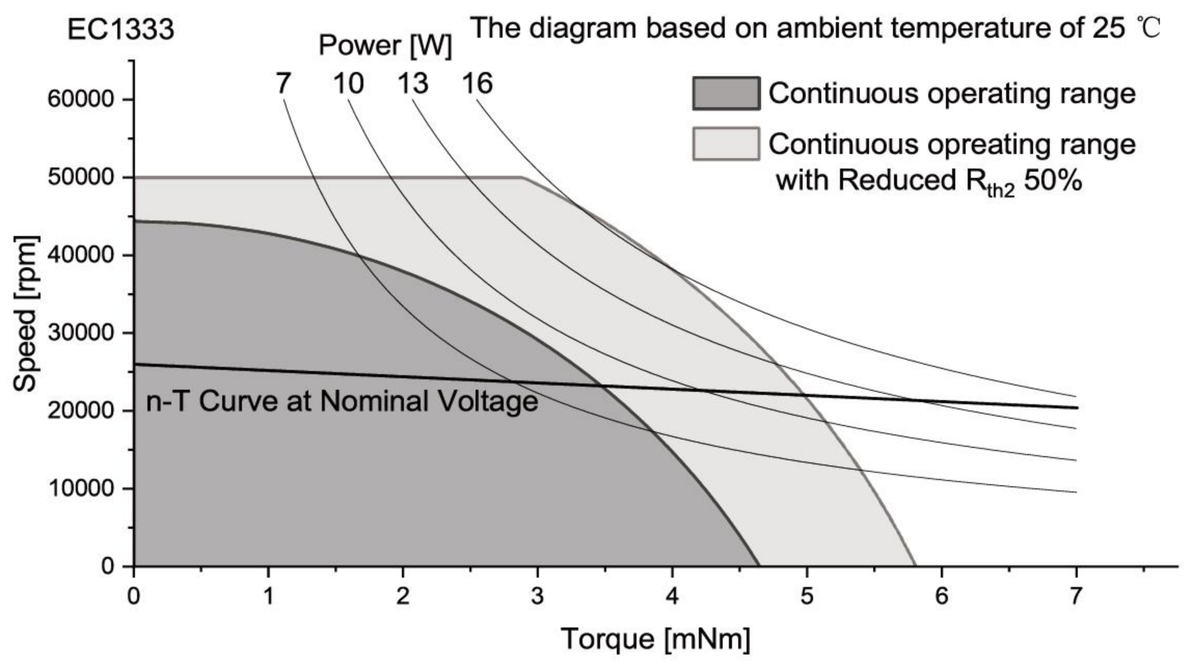

Connection

Conection A (Sensor)		PTFE	
Pin 1	Vhall 3-18 VDC	AWG30	red
Pin 2	Hall sensor HA	AWG30	Yellow
Pin 3	Hall sensor HB	AWG30	Green
Pin 4	Hall sensor HC	AWG30	blue
Pin 5	GND	AWG30	black
Pin 6	Motor winding MA	AWG30	Yellow
Pin 7	Motor winding MB	AWG30	Green
Pin 8	Motor winding MC	AWG30	blue
Conector			
MX 1.25-8Y			
Conection B (Sensorless)		PVC	
Pin 1	Motor winding MA	AWG28	yellow
Pin 2	Motor winding MB	AWG28	green
Pin 3	Motor winding MC	AWG28	blue

Configuration

Performance: Customized in the continuous operating range
Ball bearing: Preload
Flange: Standard frange front&back/customize the frange
Shaft: Length/Diameter/Cut face/double shaft/hollow shaft
Leadwire: PVC/Silicon/Teflon/UL No/Dimension/length
Connector: JST/MOLEX/TE

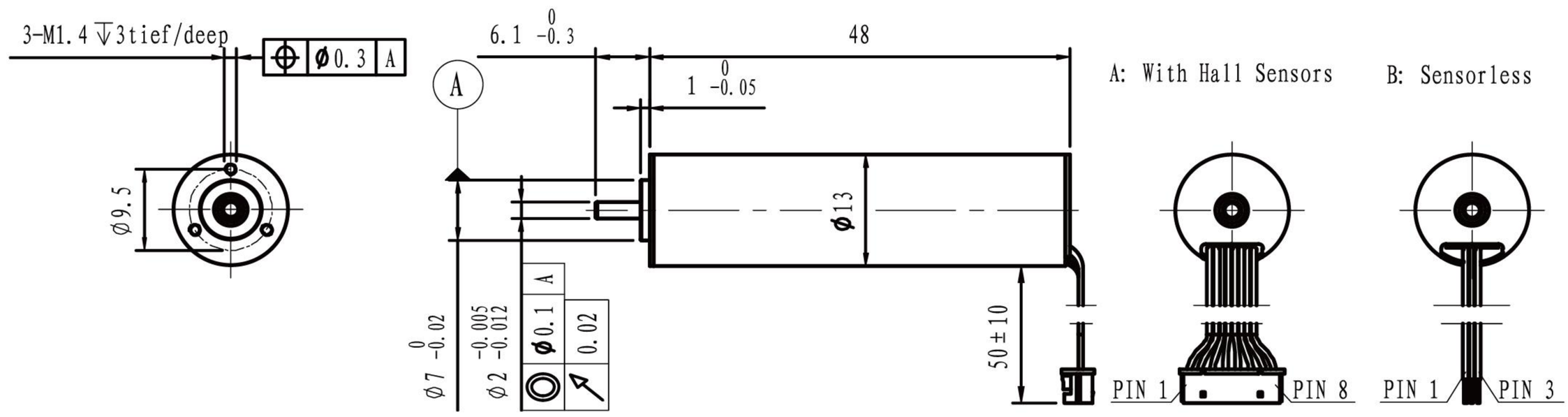

M 1:1

	Sensorless	EC1348L-…								
	With hall sensor	EC1348S-…	0630	1230	2430					
Motor data										
Values at nominal voltage										
1	Nominal voltage	V	6	12	24					
2	No load speed	rpm	30138	30255	30088					
3	No load current	mA	240	135	67					
4	Nominal speed	rpm	25858	26308	26201					
5	Nominal torque	mNm	4.5	4.5	4.5					
6	Nominal current	A	2.64	1.34	0.67					
7	Stall torque	mNm	31.68	34.49	34.83					
8	Stall current	A	17.14	9.38	4.71					
9	Max. efficiency	%	77.7	77.4	77.6					
10	Terminal resistance	Ω	0.35	1.28	5.1					
11	Terminal inductance	mH	0.012	0.048	0.189					
12	Torque constant	mNm/A	1.87	3.73	7.51					
13	Speed constant	rpm/V	5094	2558	1272					
14	Speed/torque gradient	rpm/mNm	951	877	864					
15	Mechanical time constant	ms	4.1	3.8	3.7					
16	Rotor inertia	gcm^2	0.41	0.41	0.41					

17	Thermal resistance housing-ambient	23.5 K/W
18	Thermal resistance winding-housing	5.6 K/W
19	Thermal time constant winding	6.7 s
20	Thermal time constant motor	362 s
21	Ambient temprature	-30…+100℃
22	Max. permissible winding temperature	+125℃
23	Max. permissible speed	50000 rpm
24	Axial play at axial load <0.8 N	0 mm
	>0.8 N	max. 0.3 mm
25	Radial play	preloaded
26	Max. axial load (dynamic)	0.3 N
27	Max.force for press fits (static)	11 N
	(static, shaft supported)	200 N
28	Max. radial loading, 5mm from flange	4.3 N
29	Number of pole pairs	1
30	Number of phases	3
31	Weight of motor	34.0 g

Operating Range

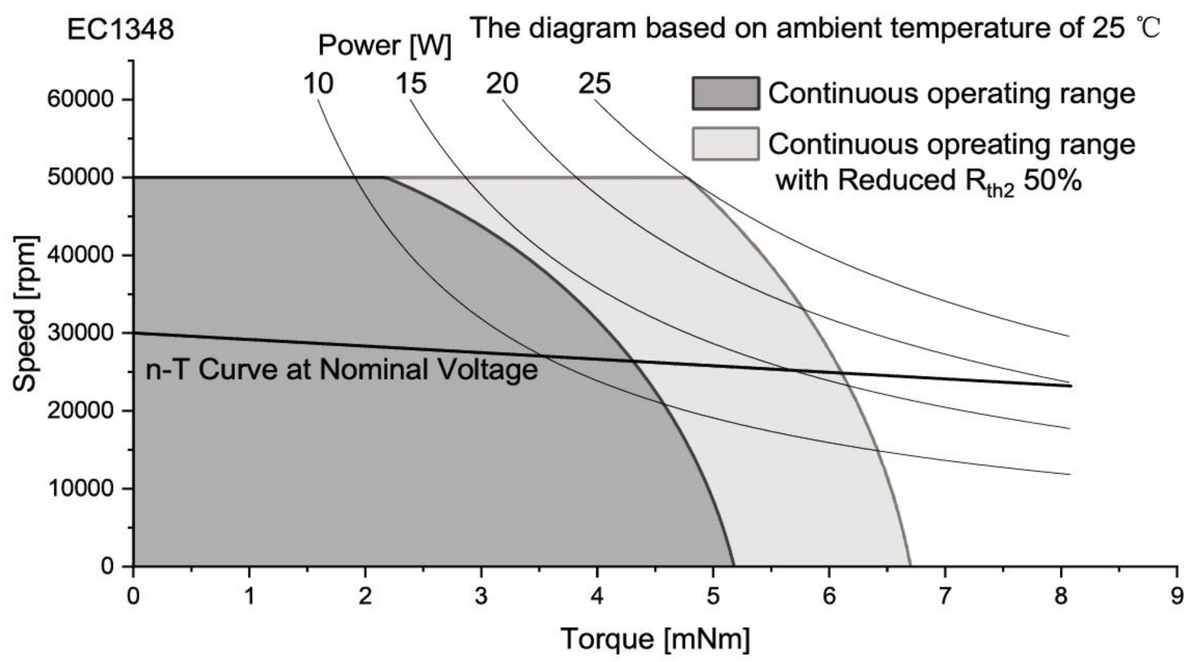

Connection

Conection A (Sensor) PTFE

Pin 1	Vhall 3-18 VDC	AWG30	red
Pin 2	Hall sensor HA	AWG30	Yellow
Pin 3	Hall sensor HB	AWG30	Green
Pin 4	Hall sensor HC	AWG30	blue
Pin 5	GND	AWG30	black
Pin 6	Motor winding MA	AWG30	Yellow
Pin 7	Motor winding MB	AWG30	Green
Pin 8	Motor winding MC	AWG30	blue

Conector
MX 1.25-8Y

Conection B (Sensorless) PVC

Pin 1	Motor winding MA	AWG28	yellow
Pin 2	Motor winding MB	AWG28	green
Pin 3	Motor winding MC	AWG28	blue

Configuration

Performance: Customized in the continuous operating range
Ball bearing: Preload
Flange: Standard frange front&back/customize the frange
Shaft: Length/Diameter/Cut face/double shaft/hollow shaft
Leadwire: PVC/Silicon/Teflon/UL No/Dimension/length
Connector: JST/MOLEX/TE

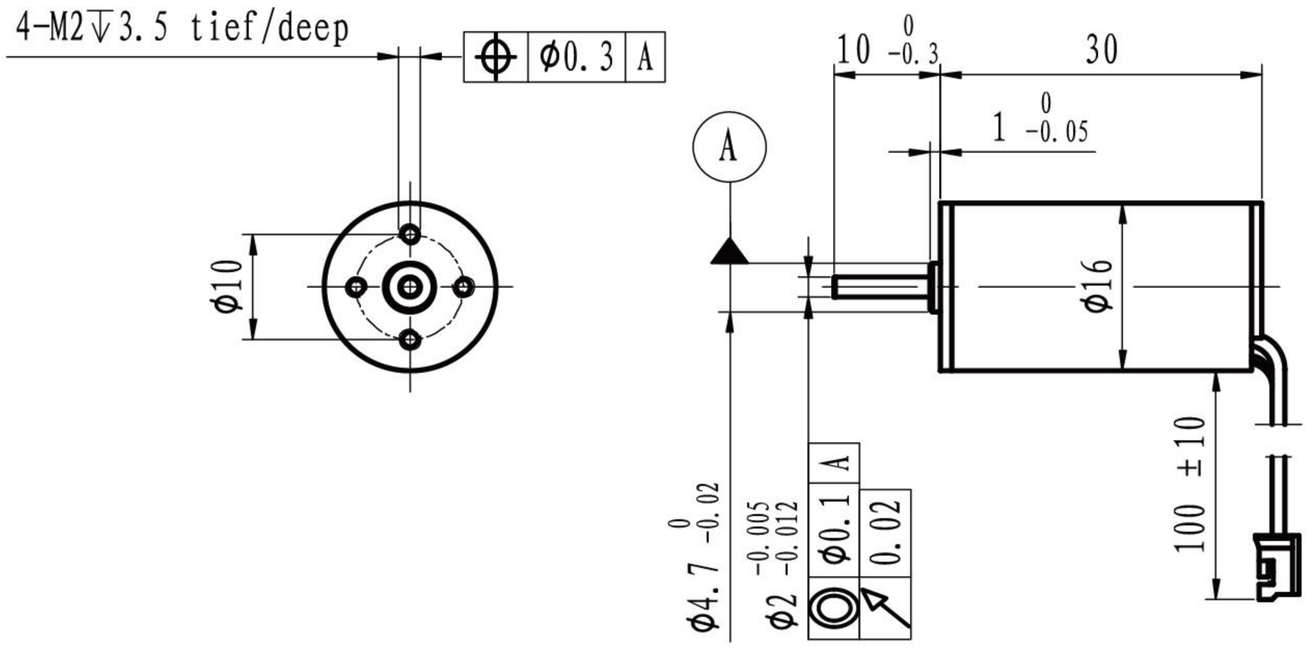

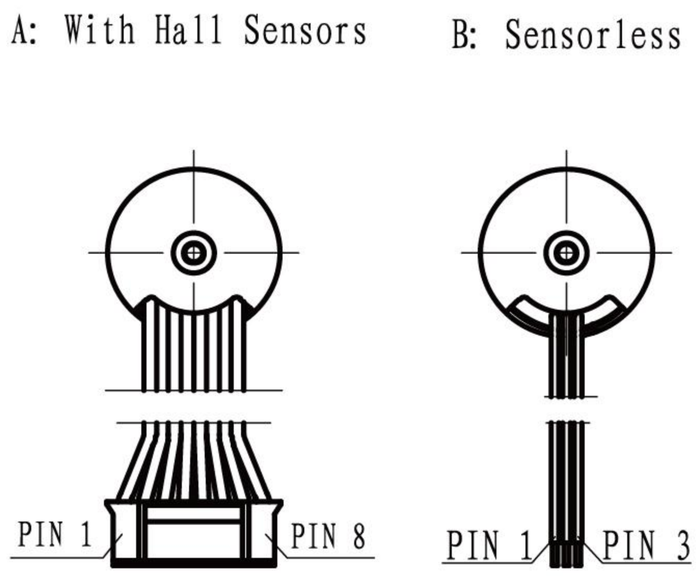

M 1:1.2

	Sensorless With hall sensor	EC1630L-… EC1630S-…	1223	1823	2423					
Motor data										
Values at nominal voltage										
1	Nominal voltage	V	12	18	24					
2	No load speed	rpm	23220	23511	23760					
3	No load current	mA	210	150	100					
4	Nominal speed	rpm	19138	19506	19203					
5	Nominal torque	mNm	3.5	3.5	3.5					
6	Nominal current	A	0.95	0.65	0.48					
7	Stall torque	mNm	19.91	20.55	18.25					
8	Stall current	A	4.44	3.10	2.09					
9	Max. efficiency	%	61.3	60.9	61.0					
10	Terminal resistance	Ω	2.7	5.8	11.5					
11	Terminal inductance	mH	0.08	0.17	0.33					
12	Torque constant	mNm/A	4.70	6.96	9.18					
13	Speed constant	rpm/V	2031	1373	1040					
14	Speed/torque gradient	rpm/mNm	1166	1144	1302					
15	Mechanical time constant	ms	5.9	5.8	6.5					
16	Rotor inertia	gcm^2	0.48	0.48	0.48					

17	Thermal resistance housing-ambient		20.0 K/W
18	Thermal resistance winding-housing		8.8 K/W
19	Thermal time constant winding		8 s
20	Thermal time constant motor		236 s
21	Ambient temprature		-30…+100℃
22	Max. permissible winding temperature		+150℃
23	Max. permissible speed		35000 rpm
24	Axial play at axial load	<1.8 N	0 mm
		>1.8 N	max. 0.3 mm
25	Radial play		preloaded
26	Max. axial load (dynamic)		1.3 N
27	Max.force for press fits (static)		15 N
	(static, shaft supported)		350 N
28	Max. radial loading, 5mm from flange		5 N
29	Number of pole pairs		1
30	Number of phases		3
31	Weight of motor		25 g

Operating Range

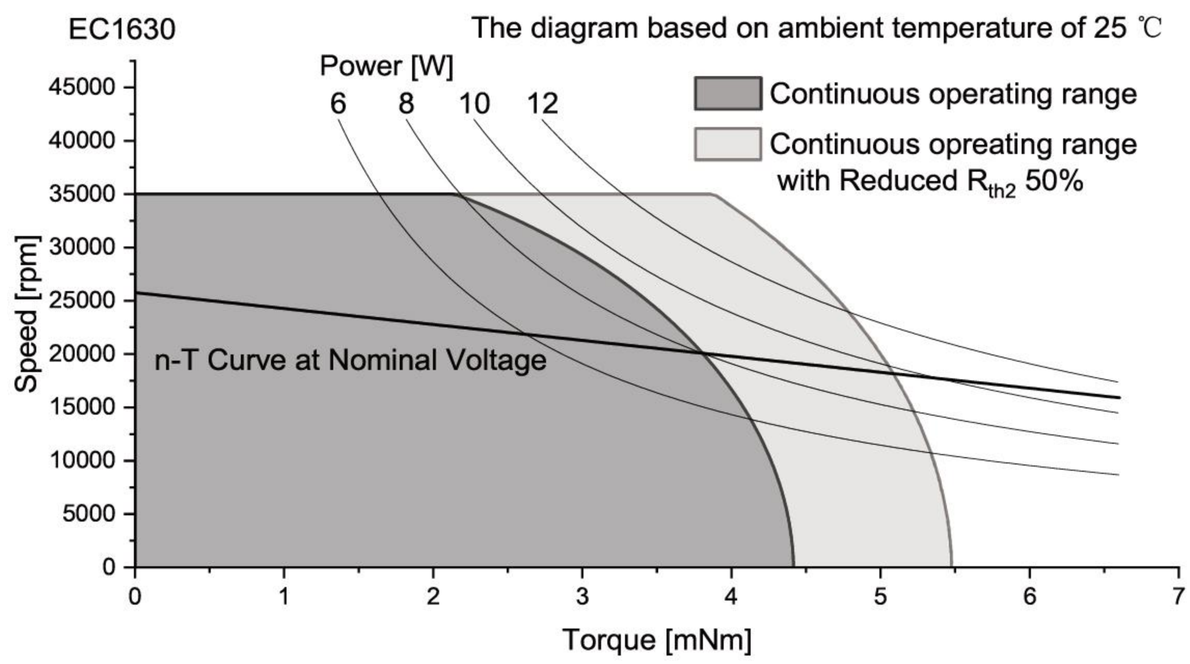

Connection

Conection A (Sensor)		PTFE	
Pin 1	Vhall 3-18 VDC	AWG30	black
Pin 2	Hall sensor HA	AWG30	black
Pin 3	Hall sensor HB	AWG30	black
Pin 4	Hall sensor HC	AWG30	black
Pin 5	GND	AWG30	black
Pin 6	Motor winding MA	AWG30	black
Pin 7	Motor winding MB	AWG30	black
Pin 8	Motor winding MC	AWG30	black
Conector			
JST	PH2.0-8Y		
Conection B (Sensorless)		PVC	
Pin 1	Motor winding MA	AWG26	yellow
Pin 2	Motor winding MB	AWG26	green
Pin 3	Motor winding MC	AWG26	blue

Configuration

Performance: Customized in the continuous operating range
Ball bearing: Preload
Flange: Standard frange front&back/customize the frange
Shaft: Length/Diameter/Cut face/double shaft/hollow shaft
Leadwire: PVC/Silicon/Teflon/UL No/Dimension/length
Connector: JST/MOLEX/TE

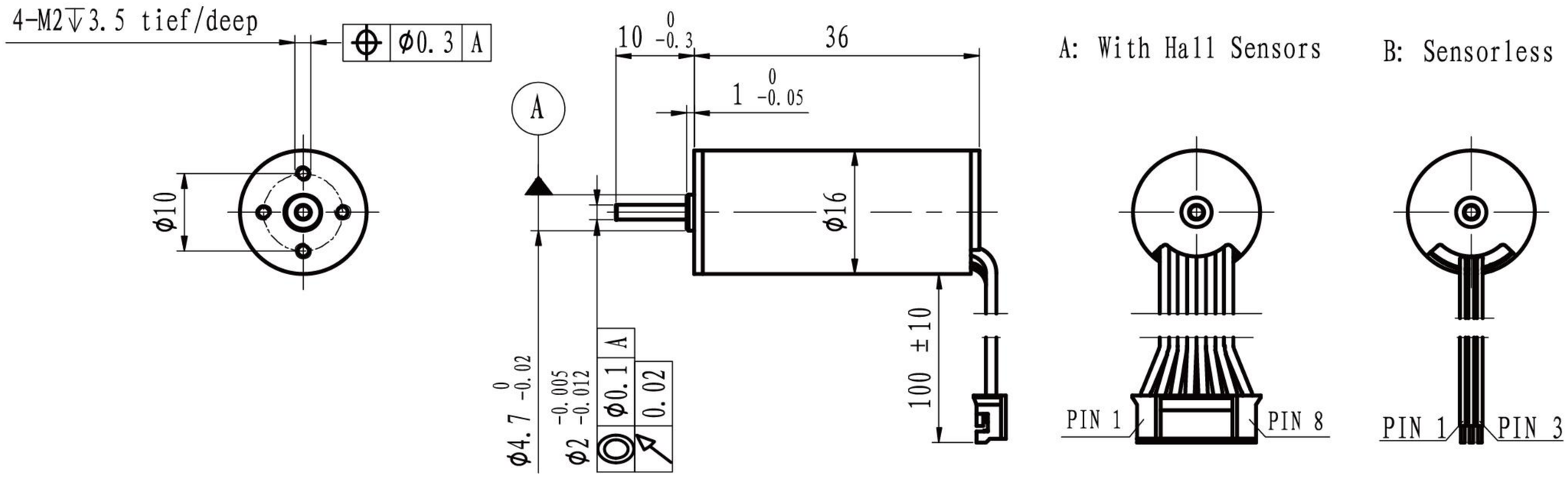

M 1:1.2

	Sensorless With hall sensor	EC1636L-… EC1636S-…	0614	0914	1214	2414				
Motor data										
Values at nominal voltage										
1	Nominal voltage	V	6	9	12	24				
2	No load speed	rpm	13835	14533	14460	14688				
3	No load current	mA	150	110	70	50				
4	Nominal speed	rpm	11412	11930	11615	12028				
5	Nominal torque	mNm	6	6	6	6				
6	Nominal current	A	1.62	1.14	0.84	0.44				
7	Stall torque	mNm	34.27	33.50	30.49	33.13				
8	Stall current	A	8.57	5.88	3.99	2.22				
9	Max. efficiency	%	75.3	74.5	75.3	72.3				
10	Terminal resistance	Ω	0.7	1.53	3.01	10.8				
11	Terminal inductance	mH	0.04	0.08	0.15	0.81				
12	Torque constant	mNm/A	4.07	5.80	7.79	15.25				
13	Speed constant	rpm/V	2347	1646	1227	626				
14	Speed/torque gradient	rpm/mNm	404	434	474	443				
15	Mechanical time constant	ms	2.6	2.8	3.1	2.9				
16	Rotor inertia	gcm^2	0.62	0.62	0.62	0.62				

17	Thermal resistance housing-ambient		17.1 K/W
18	Thermal resistance winding-housing		5.3 K/W
19	Thermal time constant winding		6 s
20	Thermal time constant motor		252 s
21	Ambient temprature		-30…+100℃
22	Max. permissible winding temperature		+150℃
23	Max. permissible speed		35000 rpm
24	Axial play at axial load	<1.8 N	0 mm
		>1.8 N	max. 0.3 mm
25	Radial play		preloaded
26	Max. axial load (dynamic)		1.3 N
27	Max.force for press fits (static)		15 N
	(static, shaft supported)		350 N
28	Max. radial loading, 5mm from flange		5 N
29	Number of pole pairs		1
30	Number of phases		3
31	Weight of motor		32 g

Operating Range

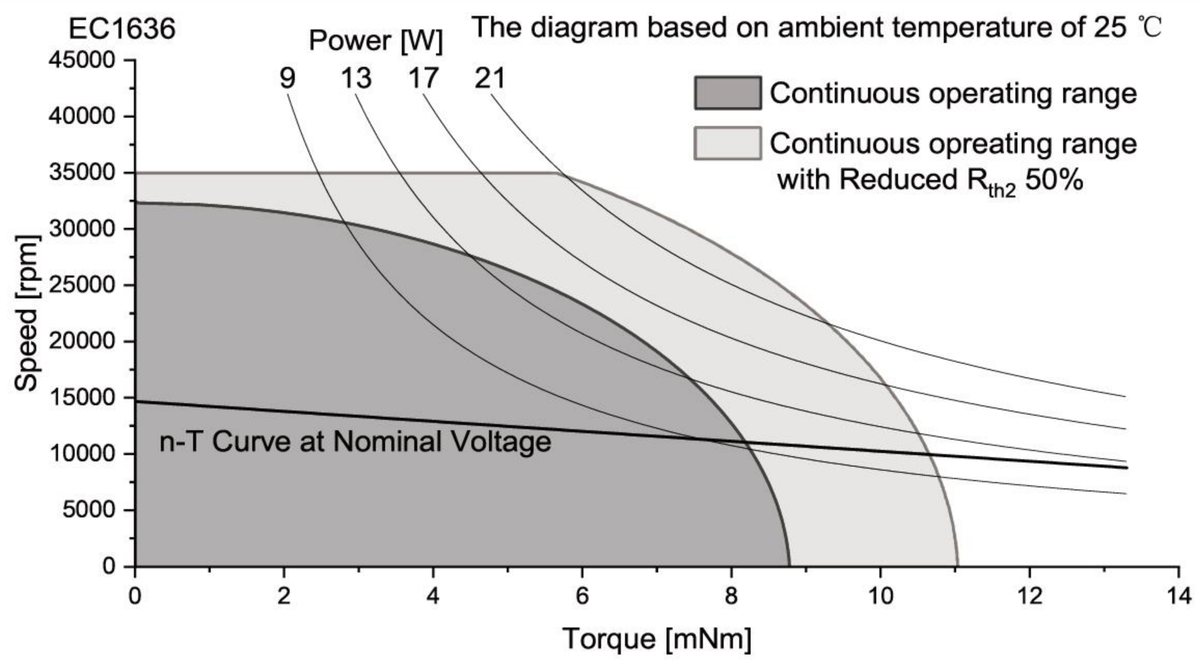

Connection

Conection A (Sensor)		PTFE	
Pin 1	Vhall 3-18 VDC	AWG30	black
Pin 2	Hall sensor HA	AWG30	black
Pin 3	Hall sensor HB	AWG30	black
Pin 4	Hall sensor HC	AWG30	black
Pin 5	GND	AWG30	black
Pin 6	Motor winding MA	AWG30	black
Pin 7	Motor winding MB	AWG30	black
Pin 8	Motor winding MC	AWG30	black
Conector			
JST	PH2.0-8Y		
Conection B (Sensorless)		PVC	
Pin 1	Motor winding MA	AWG26	yellow
Pin 2	Motor winding MB	AWG26	green
Pin 3	Motor winding MC	AWG26	blue

Configuration

Performance: Customized in the continuous operating range
Ball bearing: Preload
Flange: Standard frange front&back/customize the frange
Shaft: Length/Diameter/Cut face/double shaft/hollow shaft
Leadwire: PVC/Silicon/Teflon/UL No/Dimension/length
Connector: JST/MOLEX/TE

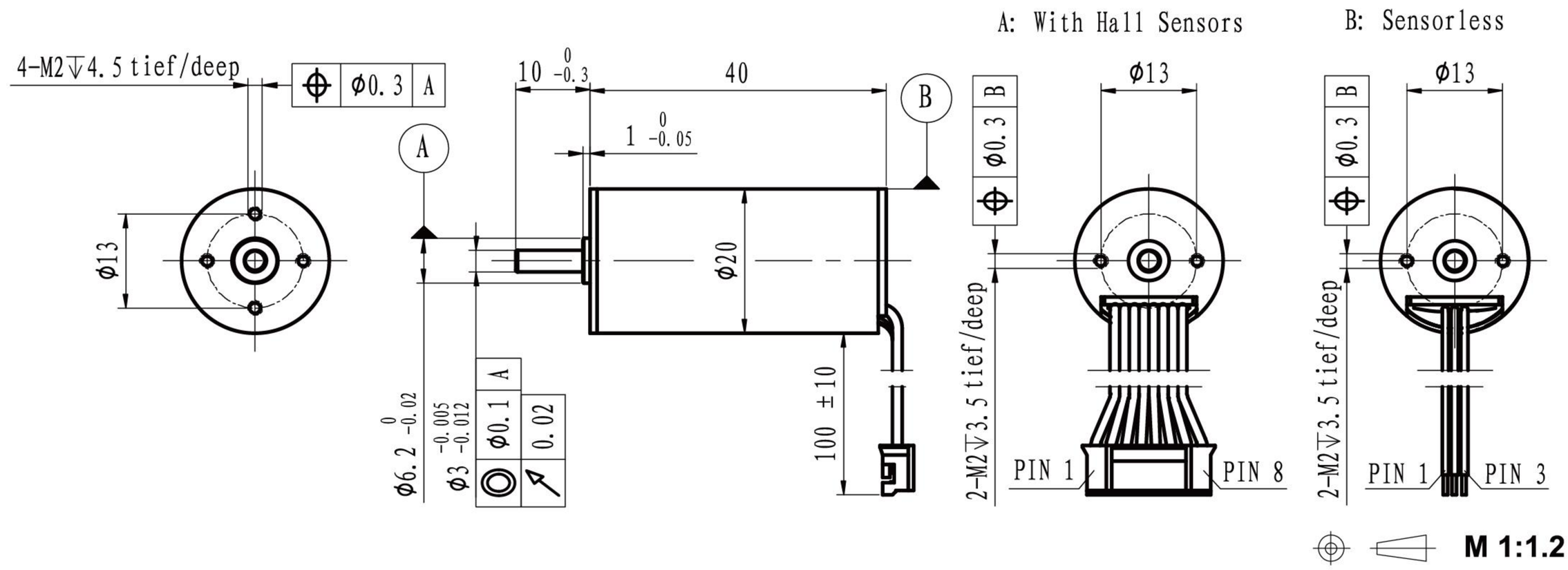

	Sensorless / With hall sensor	EC2040L-… / EC2040S-…	1218	1818	2418	3618				
Motor data										
Values at nominal voltage										
1	Nominal voltage	V	12	18	24	36				
2	No load speed	rpm	17780	18360	18500	18880				
3	No load current	mA	149	137	105	83				
4	Nominal speed	rpm	15083	16171	16042	16164				
5	Nominal torque	mNm	10	10	10	10				
6	Nominal current	A	1.72	1.22	0.93	0.64				
7	Stall torque	mNm	65.93	83.87	75.25	69.52				
8	Stall current	A	10.53	9.23	6.28	3.98				
9	Max. efficiency	%	77.6	77.1	75.8	73.2				
10	Terminal resistance	Ω	1.14	1.95	3.82	9.04				
11	Terminal inductance	mH	0.08	0.17	0.3	0.62				
12	Torque constant	mNm/A	6.35	9.22	12.18	17.83				
13	Speed constant	rpm/V	1503	1035	784	536				
14	Speed/torque gradient	rpm/mNm	270	219	246	272				
15	Mechanical time constant	ms	6.5	5.3	5.9	6.5				
16	Rotor inertia	gcm^2	2.3	2.3	2.3	2.3				

17	Thermal resistance housing-ambient	13.8 K/W
18	Thermal resistance winding-housing	4.3 K/W
19	Thermal time constant winding	8 s
20	Thermal time constant motor	366 s
21	Ambient temprature	-30…+100℃
22	Max. permissible winding temperature	+150℃
23	Max. permissible speed	35000 rpm
24	Axial play at axial load <4 N	0 mm
	>4 N	max. 0.3 mm
25	Radial play	preloaded
26	Max. axial load (dynamic)	3.5 N
27	Max.force for press fits (static)	44 N
	(static, shaft supported)	1200 N
28	Max. radial loading, 5mm from flange	15 N
29	Number of pole pairs	1
30	Number of phases	3
31	Weight of motor	56 g

Operating Range

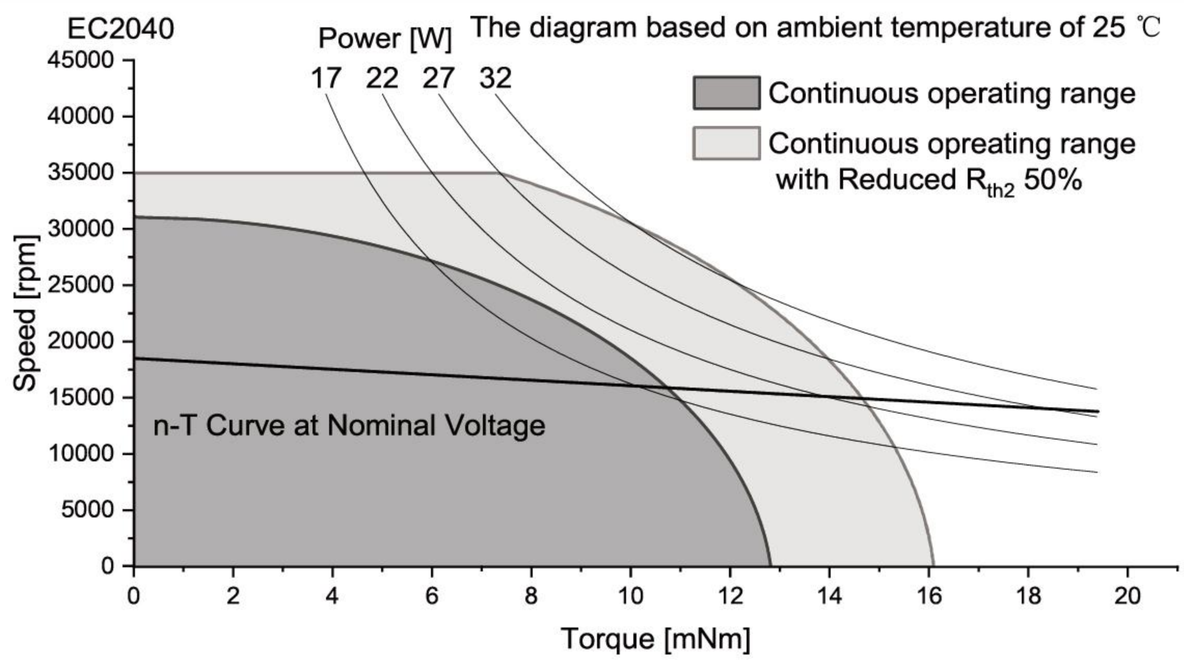

Connection

Conection A (Sensor) PVC

Pin 1	Vhall 3-18 VDC	AWG26	black
Pin 2	Hall sensor HA	AWG26	black
Pin 3	Hall sensor HB	AWG26	black
Pin 4	Hall sensor HC	AWG26	black
Pin 5	GND	AWG26	black
Pin 6	Motor winding MA	AWG26	black
Pin 7	Motor winding MB	AWG26	black
Pin 8	Motor winding MC	AWG26	black

Conector
JST PH2.0-8P

Conection B (Sensorless) PVC

Pin 1	Motor winding MA	AWG26	yellow
Pin 2	Motor winding MB	AWG26	green
Pin 3	Motor winding MC	AWG26	blue

Configuration

Performance: Customized in the continuous operating range
Ball bearing: Preload
Flange: Standard frange front&back/customize the frange
Shaft: Length/Diameter/Cut face/double shaft/hollow shaft
Leadwire: PVC/Silicon/Teflon/UL No/Dimension/length
Connector: JST/MOLEX/TE

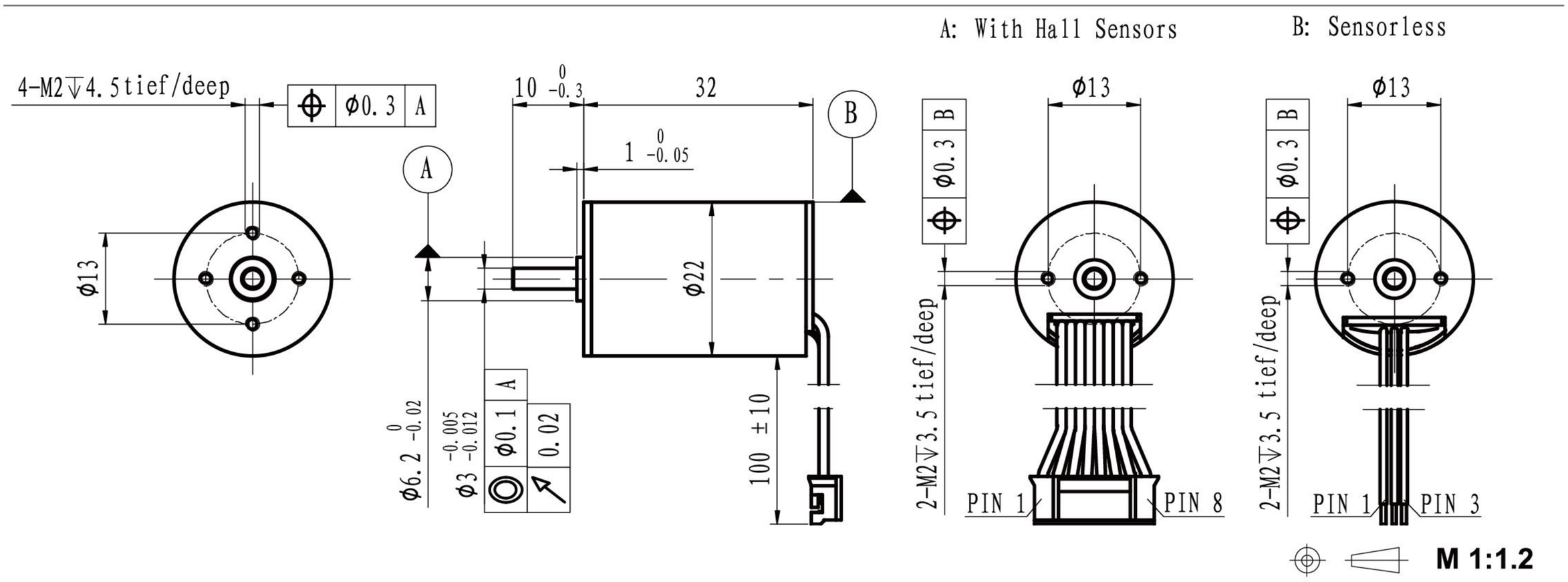

	Sensorless / With hall sensor	EC2232L-… / EC2232S-…	0612	1212	1812	2412				
Motor data										
Values at nominal voltage										
1	Nominal voltage	V	6	12	18	24				
2	No load speed	rpm	11700	11184	12080	12164				
3	No load current	mA	230	150	86	60				
4	Nominal speed	rpm	9585	9023	9937	9362				
5	Nominal torque	mNm	6	6	6	6				
6	Nominal current	A	1.50	0.76	0.52	0.39				
7	Stall torque	mNm	33.18	31.05	33.82	26.05				
8	Stall current	A	7.23	3.32	2.55	1.50				
9	Max. efficiency	%	67.5	62.0	66.6	64.0				
10	Terminal resistance	Ω	0.83	3.61	7.07	16				
11	Terminal inductance	mH	0.08	0.28	0.66	1.72				
12	Torque constant	mNm/A	4.74	9.78	13.75	18.09				
13	Speed constant	rpm/V	2014	976	695	528				
14	Speed/torque gradient	rpm/mNm	353	360	357	467				
15	Mechanical time constant	ms	5.5	5.7	5.6	7.3				
16	Rotor inertia	gcm^2	1.5	1.5	1.5	1.5				

17	Thermal resistance housing-ambient	15.2 K/W
18	Thermal resistance winding-housing	6.0 K/W
19	Thermal time constant winding	11 s
20	Thermal time constant motor	383 s
21	Ambient temprature	-30…+100℃
22	Max. permissible winding temperature	+150℃
23	Max. permissible speed	35000 rpm
24	Axial play at axial load <4 N	0 mm
	>4 N	max. 0.3 mm
25	Radial play	preloaded
26	Max. axial load (dynamic)	3.5 N
27	Max.force for press fits (static)	44 N
	(static, shaft supported)	1200 N
28	Max. radial loading, 5mm from flange	15 N
29	Number of pole pairs	1
30	Number of phases	3
31	Weight of motor	48 g

Operating Range

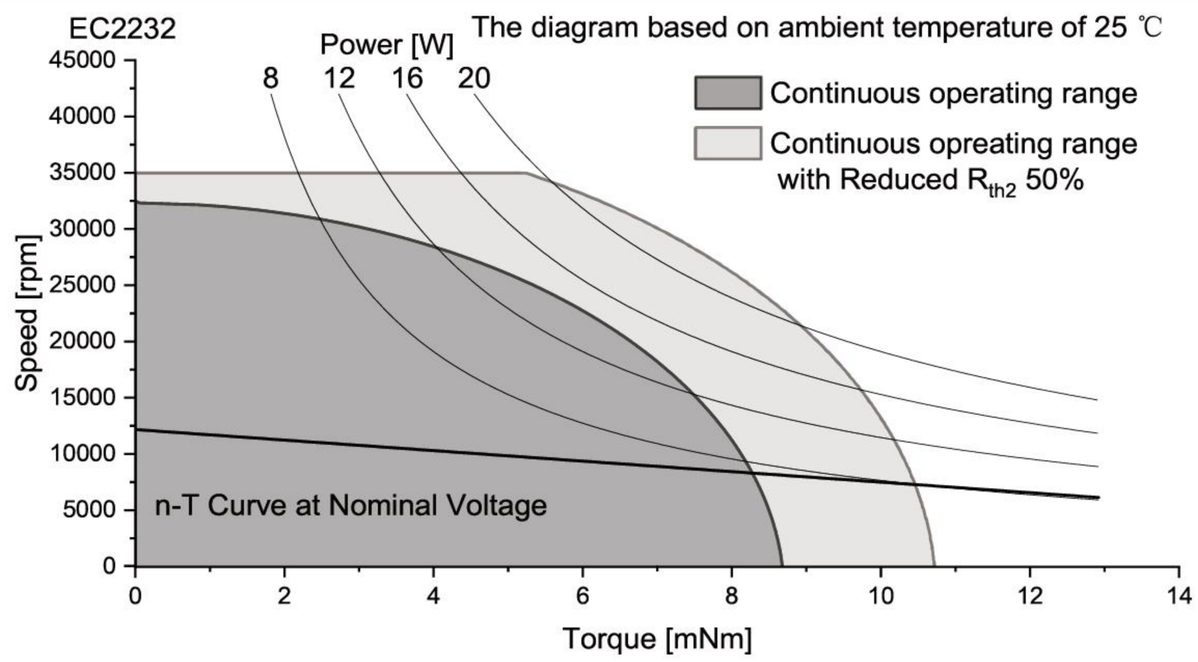

Connection

Conection A (Sensor)		PVC	
Pin 1	Vhall 3-18 VDC	AWG26	black
Pin 2	Hall sensor HA	AWG26	black
Pin 3	Hall sensor HB	AWG26	black
Pin 4	Hall sensor HC	AWG26	black
Pin 5	GND	AWG26	black
Pin 6	Motor winding MA	AWG26	black
Pin 7	Motor winding MB	AWG26	black
Pin 8	Motor winding MC	AWG26	black
Conector			
JST	PH2.0-8P		
Conection B (Sensorless)		PVC	
Pin 1	Motor winding MA	AWG26	yellow
Pin 2	Motor winding MB	AWG26	green
Pin 3	Motor winding MC	AWG26	blue

Configuration

Performance: Customized in the continuous operating range
Ball bearing: Preload
Flange: Standard frange front&back/customize the frange
Shaft: Length/Diameter/Cut face/double shaft/hollow shaft
Leadwire: PVC/Silicon/Teflon/UL No/Dimension/length
Connector: JST/MOLEX/TE

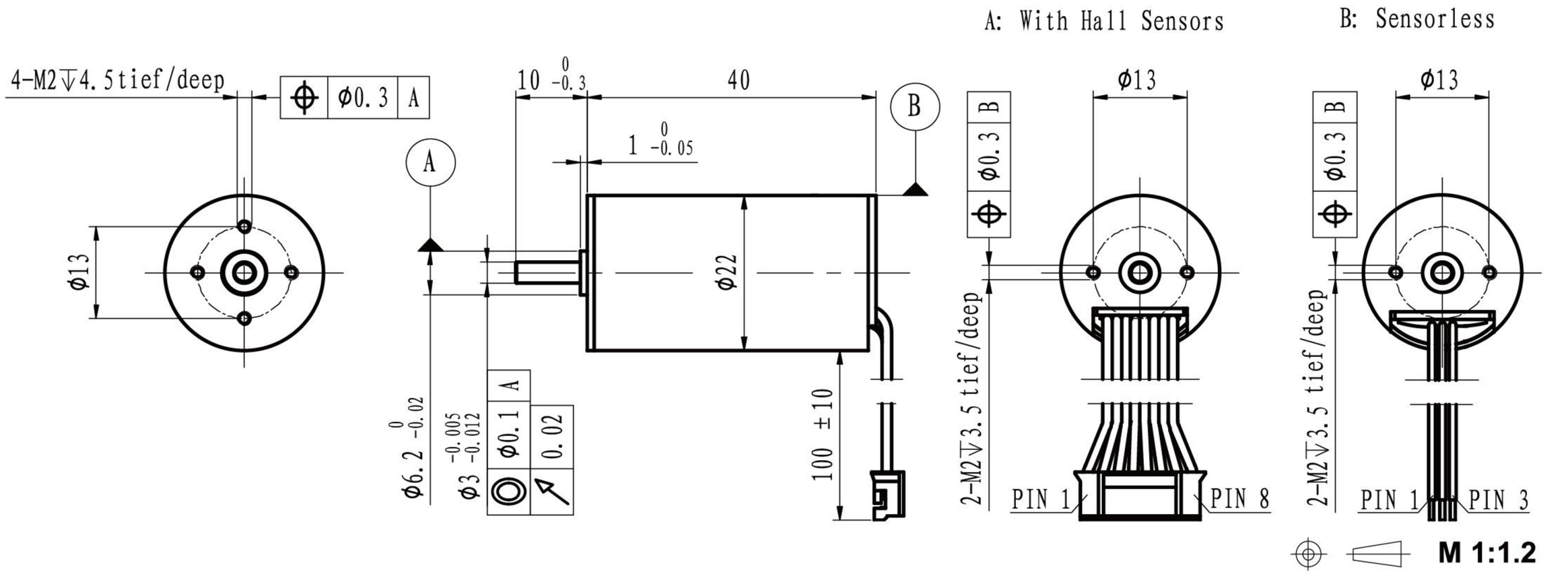

	Sensorless With hall sensor	EC2240L-… EC2240S-…	1216	2416	3016	3616				
Motor data										
Values at nominal voltage										
1	Nominal voltage	V	12	24	30	36				
2	No load speed	rpm	16748	16768	16713	16679				
3	No load current	mA	183	115	87	73				
4	Nominal speed	rpm	14354	14337	14360	14128				
5	Nominal torque	mNm	12	12	12	12				
6	Nominal current	A	1.96	1.01	0.80	0.67				
7	Stall torque	mNm	83.94	82.76	85.25	78.47				
8	Stall current	A	12.63	6.28	5.15	3.95				
9	Max. efficiency	%	77.4	74.8	75.7	74.7				
10	Terminal resistance	Ω	0.95	3.82	5.83	9.11				
11	Terminal inductance	mH	0.07	0.28	0.44	0.64				
12	Torque constant	mNm/A	6.74	13.42	16.85	20.23				
13	Speed constant	rpm/V	1416	712	567	472				
14	Speed/torque gradient	rpm/mNm	200	203	196	213				
15	Mechanical time constant	ms	4.8	4.9	4.7	5.1				
16	Rotor inertia	gcm^2	2.3	2.3	2.3	2.3				

17	Thermal resistance housing-ambient	12.7 K/W
18	Thermal resistance winding-housing	5.0 K/W
19	Thermal time constant winding	12 s
20	Thermal time constant motor	420 s
21	Ambient temprature	-30…+100℃
22	Max. permissible winding temperature	+150℃
23	Max. permissible speed	35000 rpm
24	Axial play at axial load <4 N	0 mm
	>4 N	max. 0.3 mm
25	Radial play	preloaded
26	Max. axial load (dynamic)	3.5 N
27	Max.force for press fits (static)	44 N
	(static, shaft supported)	1200 N
28	Max. radial loading, 5mm from flange	15 N
29	Number of pole pairs	1
30	Number of phases	3
31	Weight of motor	64 g

Operating Range

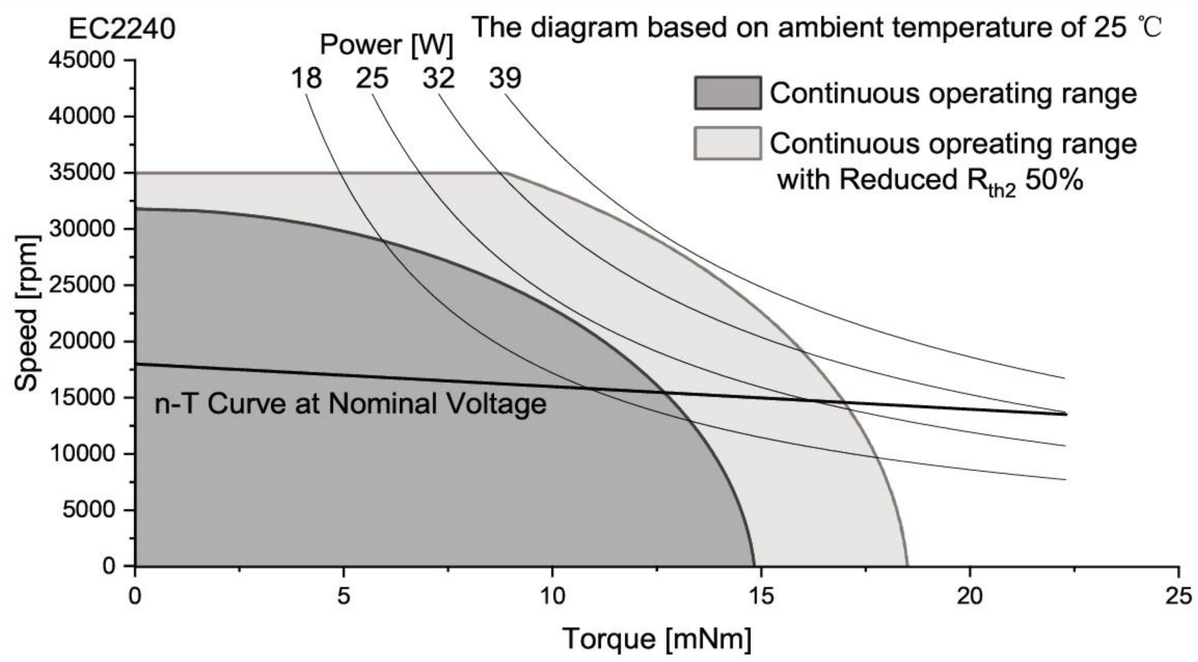

Connection

Conection A (Sensor)		PVC	
Pin 1	Vhall 3-18 VDC	AWG26	black
Pin 2	Hall sensor HA	AWG26	black
Pin 3	Hall sensor HB	AWG26	black
Pin 4	Hall sensor HC	AWG26	black
Pin 5	GND	AWG26	black
Pin 6	Motor winding MA	AWG26	black
Pin 7	Motor winding MB	AWG26	black
Pin 8	Motor winding MC	AWG26	black
Conector			
JST	PH2.0-8P		
Conection B (Sensorless)		PVC	
Pin 1	Motor winding MA	AWG26	yellow
Pin 2	Motor winding MB	AWG26	green
Pin 3	Motor winding MC	AWG26	blue

Configuration

Performance: Customized in the continuous operating range
Ball bearing: Preload
Flange: Standard frange front&back/customize the frange
Shaft: Length/Diameter/Cut face/double shaft/hollow shaft
Leadwire: PVC/Silicon/Teflon/UL No/Dimension/length
Connector: JST/MOLEX/TE

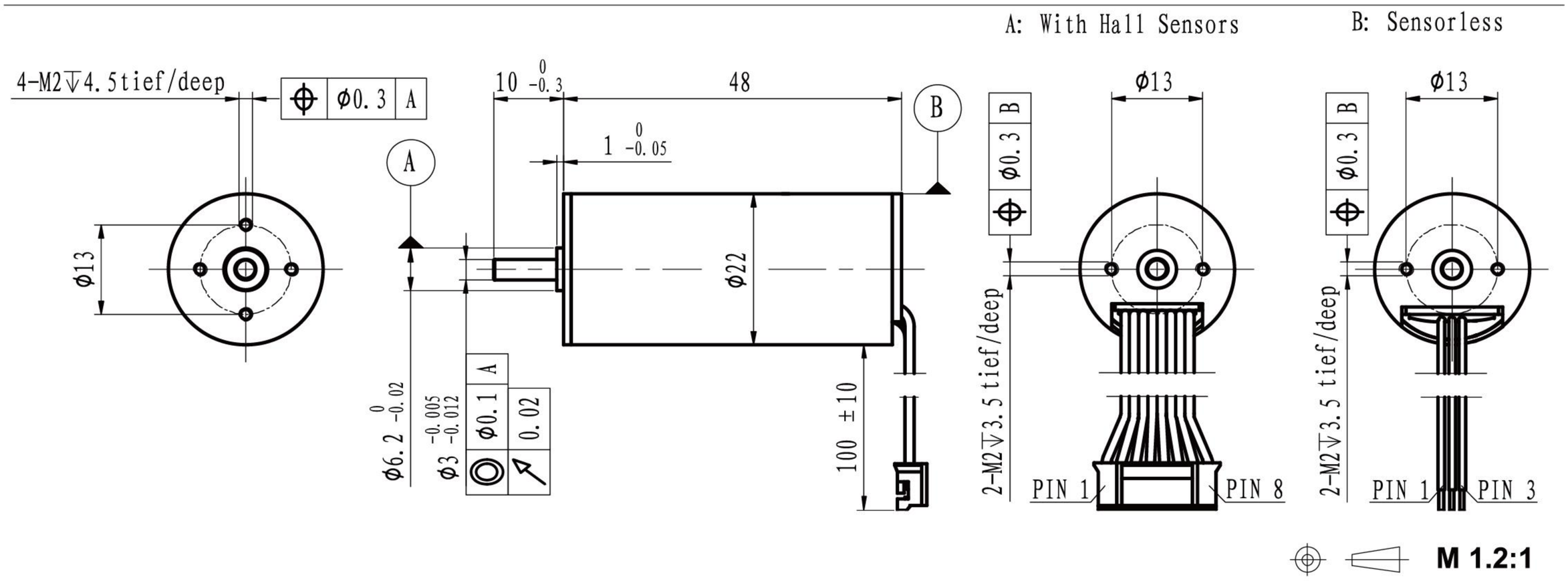

	Sensorless With hall sensor	EC2248L-… EC2248S-…	1213	2413	3613	4813				
Motor data										
Values at nominal voltage										
1	Nominal voltage	V	12	24	36	48				
2	No load speed	rpm	13004	12930	13390	13641				
3	No load current	mA	179	102	82	69				
4	Nominal speed	rpm	11422	11413	11749	12159				
5	Nominal torque	mNm	18	18	18	18				
6	Nominal current	A	2.24	1.13	0.79	0.61				
7	Stall torque	mNm	147.93	153.38	146.84	165.71				
8	Stall current	A	17.14	8.86	5.88	5.07				
9	Max. efficiency	%	80.6	79.7	77.8	78.0				
10	Terminal resistance	Ω	0.7	2.71	6.12	9.47				
11	Terminal inductance	mH	0.07	0.28	0.58	0.97				
12	Torque constant	mNm/A	8.72	17.52	25.32	33.14				
13	Speed constant	rpm/V	1095	545	377	288				
14	Speed/torque gradient	rpm/mNm	88	84	91	82				
15	Mechanical time constant	ms	2.9	2.7	3.0	2.7				
16	Rotor inertia	gcm^2	3.1	3.1	3.1	3.1				

17	Thermal resistance housing-ambient	11.8 K/W
18	Thermal resistance winding-housing	4.7 K/W
19	Thermal time constant winding	21 s
20	Thermal time constant motor	504 s
21	Ambient temprature	-30…+100℃
22	Max. permissible winding temperature	+150℃
23	Max. permissible speed	30000 rpm
24	Axial play at axial load <4 N	0 mm
	>4 N	max. 0.3 mm
25	Radial play	preloaded
26	Max. axial load (dynamic)	3.5 N
27	Max.force for press fits (static)	44 N
	(static, shaft supported)	1200 N
28	Max. radial loading, 5mm from flange	15 N
29	Number of pole pairs	1
30	Number of phases	3
31	Weight of motor	85 g

Operating Range

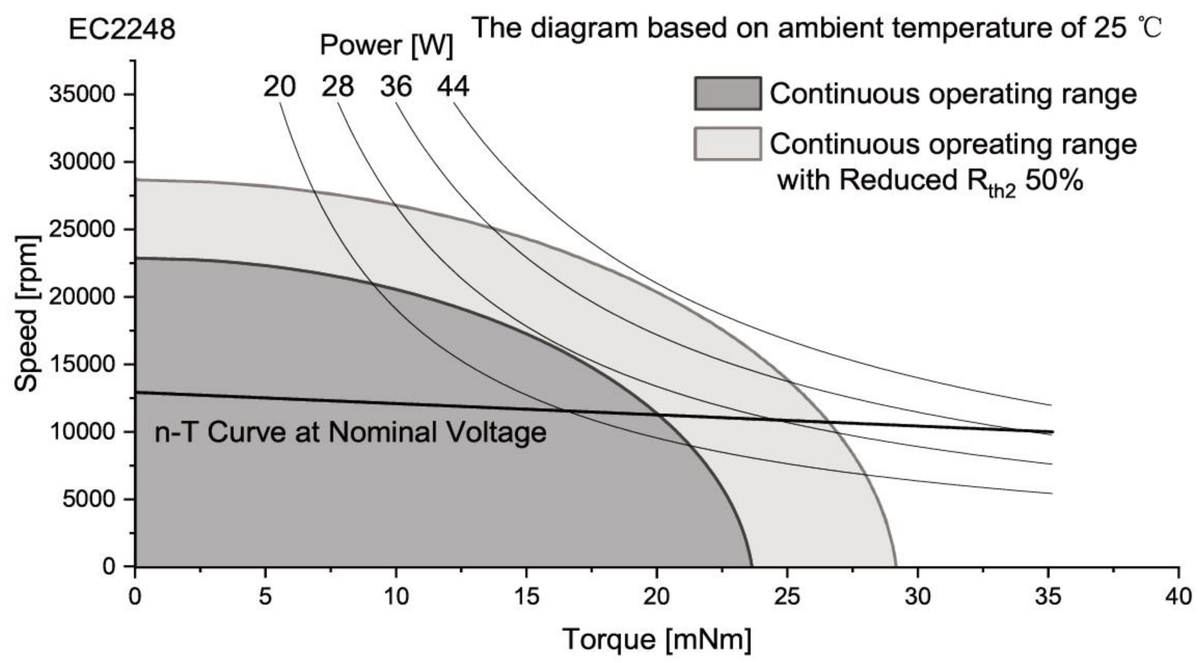

Connection

Conection A (Sensor)		PVC	
Pin 1	Vhall 3-18 VDC	AWG26	black
Pin 2	Hall sensor HA	AWG26	black
Pin 3	Hall sensor HB	AWG26	black
Pin 4	Hall sensor HC	AWG26	black
Pin 5	GND	AWG26	black
Pin 6	Motor winding MA	AWG26	black
Pin 7	Motor winding MB	AWG26	black
Pin 8	Motor winding MC	AWG26	black
Conector			
JST	PH2.0-8P		
Conection B (Sensorless)		PVC	
Pin 1	Motor winding MA	AWG26	yellow
Pin 2	Motor winding MB	AWG26	green
Pin 3	Motor winding MC	AWG26	blue

Configuration

Performance: Customized in the continuous operating range
Ball bearing: Preload
Flange: Standard frange front&back/customize the frange
Shaft: Length/Diameter/Cut face/double shaft/hollow shaft
Leadwire: PVC/Silicon/Teflon/UL No/Dimension/length
Connector: JST/MOLEX/TE

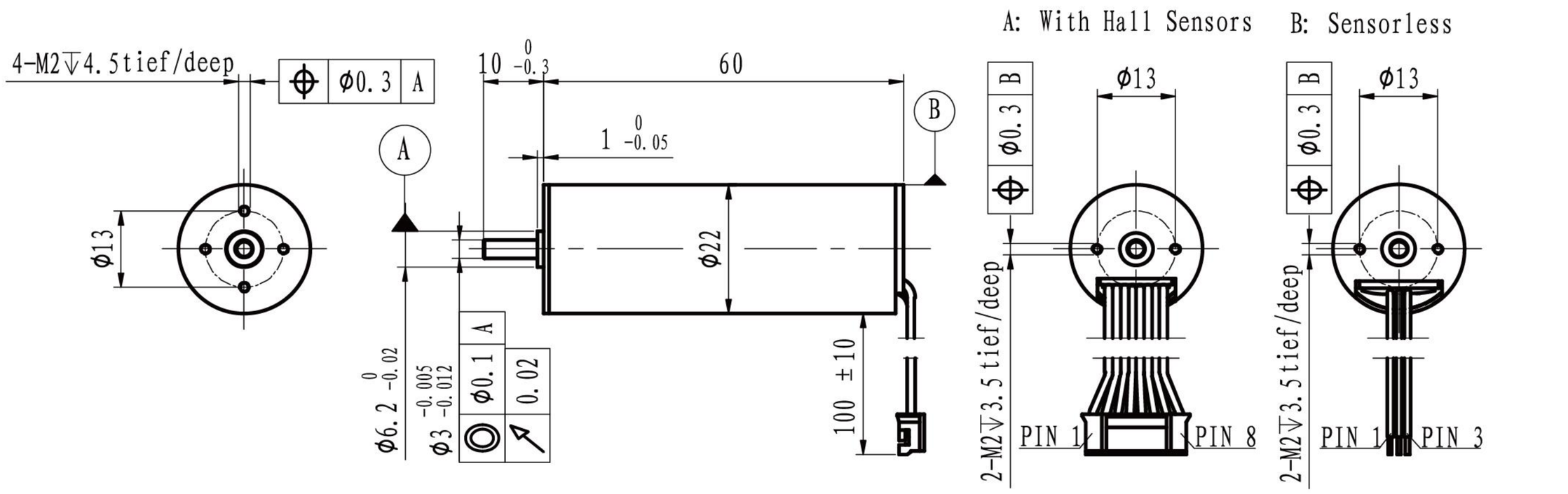

M 1:1.5

		Sensorless With hall sensor	EC2260L-… EC2260S-…	1213	2413	3613	4813				
Motor data											
Values at nominal voltage											
1	Nominal voltage		V	12	24	36	48				
2	No load speed		rpm	16360	16086	16030	16200				
3	No load current		mA	440	230	170	110				
4	Nominal speed		rpm	14517	14441	14364	14530				
5	Nominal torque		mNm	28	28	28	28				
6	Nominal current		A	4.49	2.22	1.49	1.11				
7	Stall torque		mNm	248.58	273.76	269.48	271.54				
8	Stall current		A	36.36	19.67	12.90	9.82				
9	Max. efficiency		%	79.2	79.5	78.4	79.9				
10	Terminal resistance		Ω	0.33	1.22	2.79	4.89				
11	Terminal inductance		mH	0.03	0.13	0.3	0.52				
12	Torque constant		mNm/A	6.92	14.08	21.16	27.98				
13	Speed constant		rpm/V	1380	678	451	341				
14	Speed/torque gradient		rpm/mNm	66	59	59	60				
15	Mechanical time constant		ms	2.1	1.9	1.9	1.9				
16	Rotor inertia		gcm^2	3.1	3.1	3.1	3.1				

17	Thermal resistance housing-ambient		7.6 K/W
18	Thermal resistance winding-housing		4.6 K/W
19	Thermal time constant winding		29 s
20	Thermal time constant motor		533 s
21	Ambient temprature		-30…+100℃
22	Max. permissible winding temperature		+150℃
23	Max. permissible speed		30000 rpm
24	Axial play at axial load	<4 N	0 mm
		>4 N	max. 0.3 mm
25	Radial play		preloaded
26	Max. axial load (dynamic)		3.5 N
27	Max.force for press fits (static)		44 N
	(static, shaft supported)		1200 N
28	Max. radial loading, 5mm from flange		15 N
29	Number of pole pairs		1
30	Number of phases		3
31	Weight of motor		122 g

Operating Range

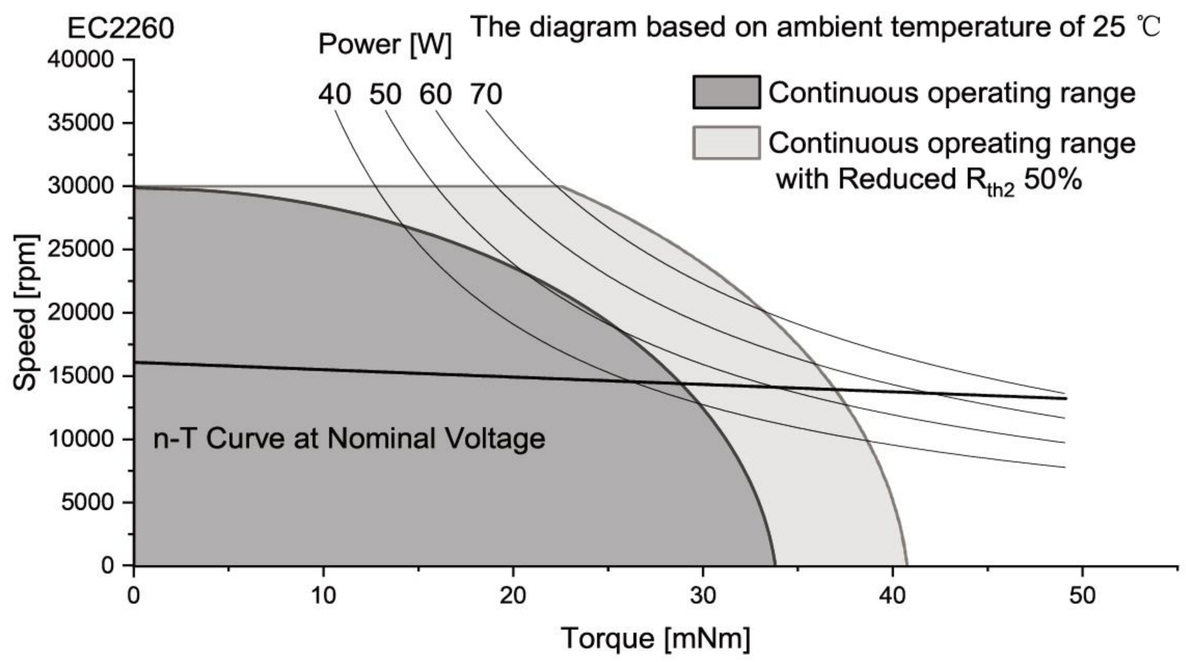

Connection

Conection A (Sensor)		PVC	
Pin 1	Vhall 3-18 VDC	AWG26	black
Pin 2	Hall sensor HA	AWG26	black
Pin 3	Hall sensor HB	AWG26	black
Pin 4	Hall sensor HC	AWG26	black
Pin 5	GND	AWG26	black
Pin 6	Motor winding MA	AWG26	black
Pin 7	Motor winding MB	AWG26	black
Pin 8	Motor winding MC	AWG26	black
Conector			
JST	PH2.0-8P		
Conection B (Sensorless)		PVC	
Pin 1	Motor winding MA	AWG26	yellow
Pin 2	Motor winding MB	AWG26	green
Pin 3	Motor winding MC	AWG26	blue

Configuration

Performance: Customized in the continuous operating range
Ball bearing: Preload
Flange: Standard frange front&back/customize the frange
Shaft: Length/Diameter/Cut face/double shaft/hollow shaft
Leadwire: PVC/Silicon/Teflon/UL No/Dimension/length
Connector: JST/MOLEX/TE

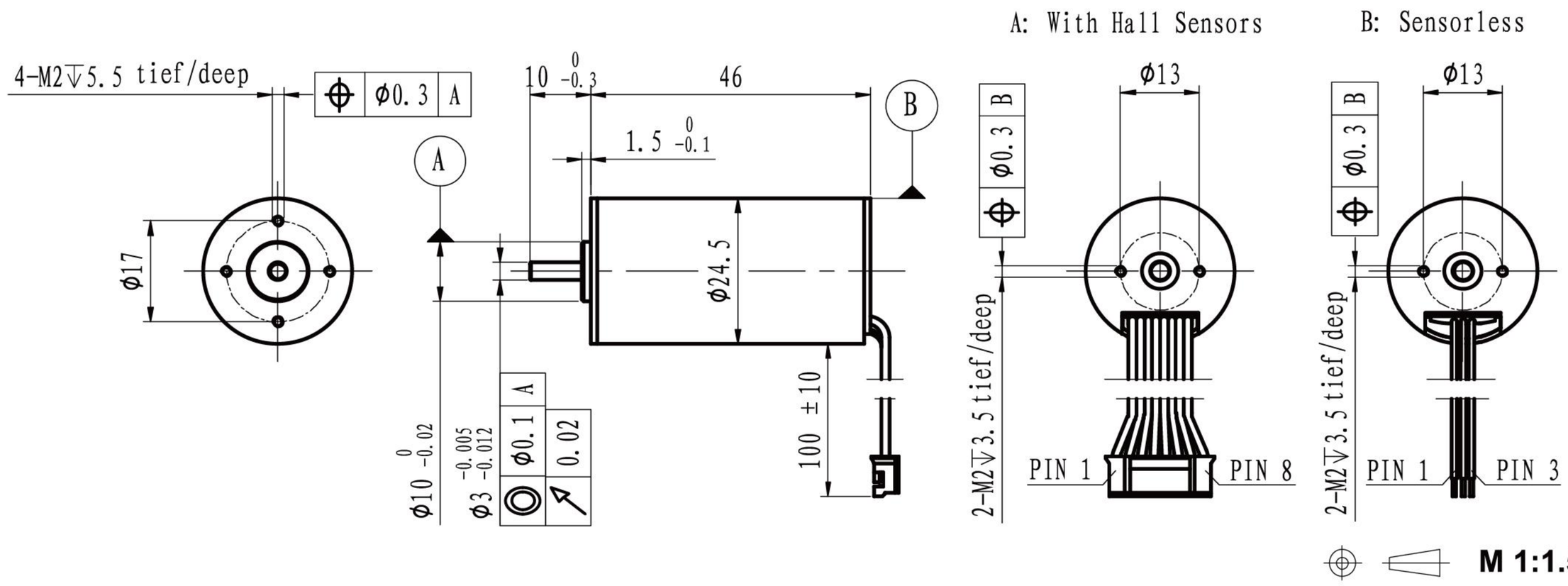

	Sensorless / With hall sensor	EC2446L-… / EC2446S-…	1214	2414	3614	4814				
Motor data										
Values at nominal voltage										
1	Nominal voltage	V	12	24	36	48				
2	No load speed	rpm	14150	13872	13920	13870				
3	No load current	mA	249	124	106	79				
4	Nominal speed	rpm	12675	12487	12662	12446				
5	Nominal torque	mNm	18	18	18	18				
6	Nominal current	A	2.50	1.23	0.84	0.63				
7	Stall torque	mNm	172.68	180.35	199.18	175.28				
8	Stall current	A	21.82	11.16	8.28	5.46				
9	Max. efficiency	%	79.8	80.0	78.6	77.4				
10	Terminal resistance	Ω	0.55	2.15	4.35	8.79				
11	Terminal inductance	mH	0.07	0.29	0.62	1.14				
12	Torque constant	mNm/A	8.01	16.34	24.38	32.57				
13	Speed constant	rpm/V	1193	584	392	293				
14	Speed/torque gradient	rpm/mNm	82	77	70	79				
15	Mechanical time constant	ms	3.6	3.4	3.1	3.5				
16	Rotor inertia	gcm^2	4.2	4.2	4.2	4.2				

17	Thermal resistance housing-ambient	11.6 K/W
18	Thermal resistance winding-housing	5.6 K/W
19	Thermal time constant winding	30 s
20	Thermal time constant motor	557 s
21	Ambient temprature	-30…+100℃
22	Max. permissible winding temperature	+150℃
23	Max. permissible speed	30000 rpm
24	Axial play at axial load <4 N	0 mm
	>4 N	max. 0.3 mm
25	Radial play	preloaded
26	Max. axial load (dynamic)	3.5 N
27	Max.force for press fits (static)	44 N
	(static, shaft supported)	1200 N
28	Max. radial loading, 5mm from flange	15 N
29	Number of pole pairs	1
30	Number of phases	3
31	Weight of motor	92 g

Operating Range

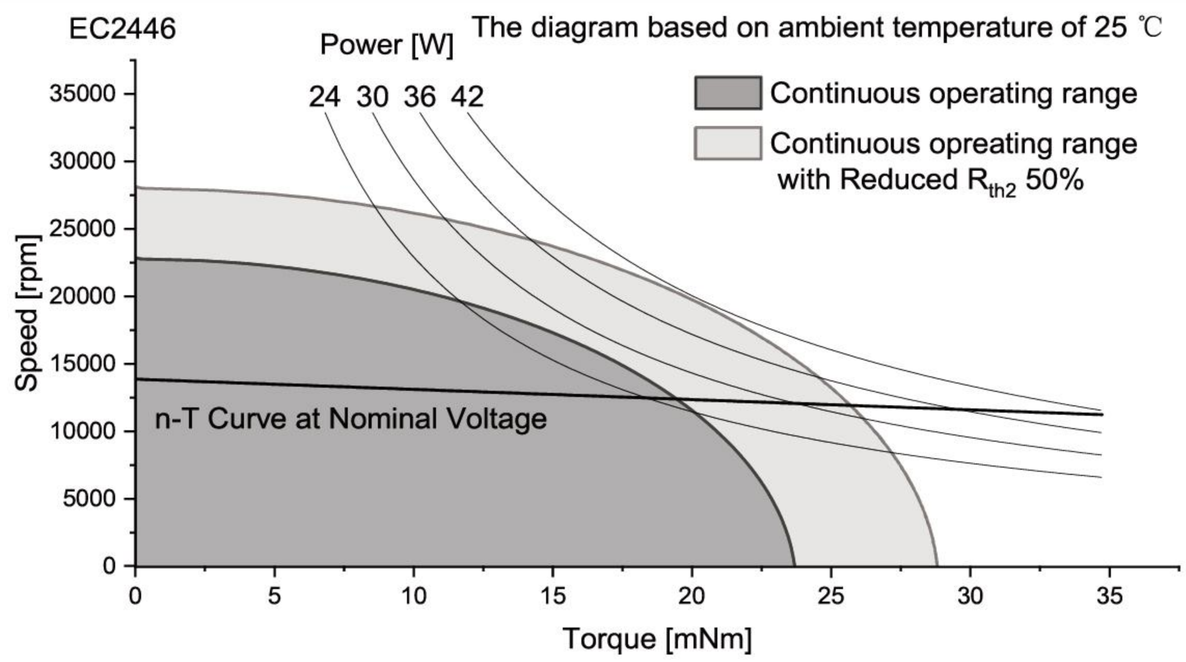

Connection

Conection A (Sensor)		PVC	
Pin 1	Vhall 3-18 VDC	AWG26	black
Pin 2	Hall sensor HA	AWG26	black
Pin 3	Hall sensor HB	AWG26	black
Pin 4	Hall sensor HC	AWG26	black
Pin 5	GND	AWG26	black
Pin 6	Motor winding MA	AWG26	black
Pin 7	Motor winding MB	AWG26	black
Pin 8	Motor winding MC	AWG26	black
Conector			
JST	PH2.0-8P		
Conection B (Sensorless)		PVC	
Pin 1	Motor winding MA	AWG26	yellow
Pin 2	Motor winding MB	AWG26	green
Pin 3	Motor winding MC	AWG26	blue

Configuration

Performance: Customized in the continuous operating range
Ball bearing: Preload
Flange: Standard frange front&back/customize the frange
Shaft: Length/Diameter/Cut face/double shaft/hollow shaft
Leadwire: PVC/Silicon/Teflon/UL No/Dimension/length
Connector: JST/MOLEX/TE

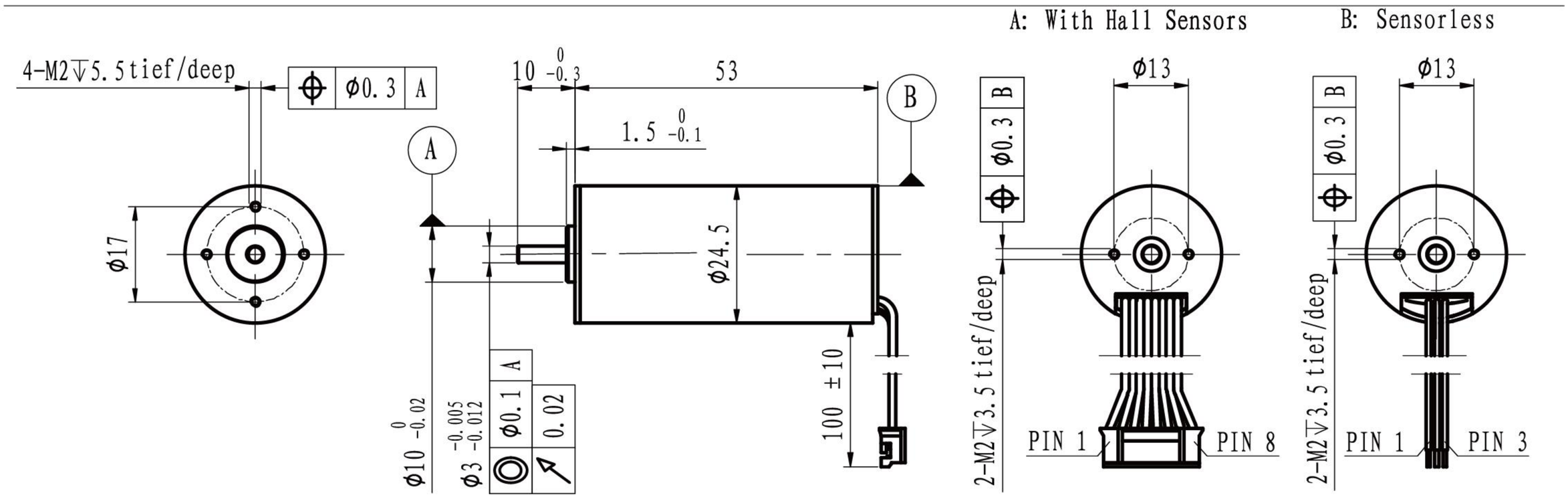

M 1:1.5

	Sensorless With hall sensor	EC2453L-… EC2453S-…	1215	2415	3615	4815				
Motor data										
Values at nominal voltage										
1	Nominal voltage	V	12	24	36	48				
2	No load speed	rpm	15083	15398	15202	15310				
3	No load current	mA	308	156	115	94				
4	Nominal speed	rpm	13938	14347	14211	14263				
5	Nominal torque	mNm	20	20	20	20				
6	Nominal current	A	2.96	1.51	1.01	0.77				
7	Stall torque	mNm	263.48	293.05	306.73	292.55				
8	Stall current	A	35.29	20.00	13.79	9.96				
9	Max. efficiency	%	82.2	83.1	82.6	81.5				
10	Terminal resistance	Ω	0.34	1.2	2.61	4.82				
11	Terminal inductance	mH	0.05	0.19	0.44	0.76				
12	Torque constant	mNm/A	7.53	14.77	22.43	29.66				
13	Speed constant	rpm/V	1268	647	426	322				
14	Speed/torque gradient	rpm/mNm	57	53	50	52				
15	Mechanical time constant	ms	2.5	2.3	2.2	2.3				
16	Rotor inertia	gcm^2	4.2	4.2	4.2	4.2				

17	Thermal resistance housing-ambient	10.2 K/W
18	Thermal resistance winding-housing	6.4 K/W
19	Thermal time constant winding	36 s
20	Thermal time constant motor	555 s
21	Ambient temprature	-30…+100℃
22	Max. permissible winding temperature	+150℃
23	Max. permissible speed	30000 rpm
24	Axial play at axial load <4 N	0 mm
	>4 N	max. 0.3 mm
25	Radial play	preloaded
26	Max. axial load (dynamic)	3.5 N
27	Max.force for press fits (static)	44 N
	(static, shaft supported)	1200 N
28	Max. radial loading, 5mm from flange	15 N
29	Number of pole pairs	1
30	Number of phases	3
31	Weight of motor	110 g

Operating Range

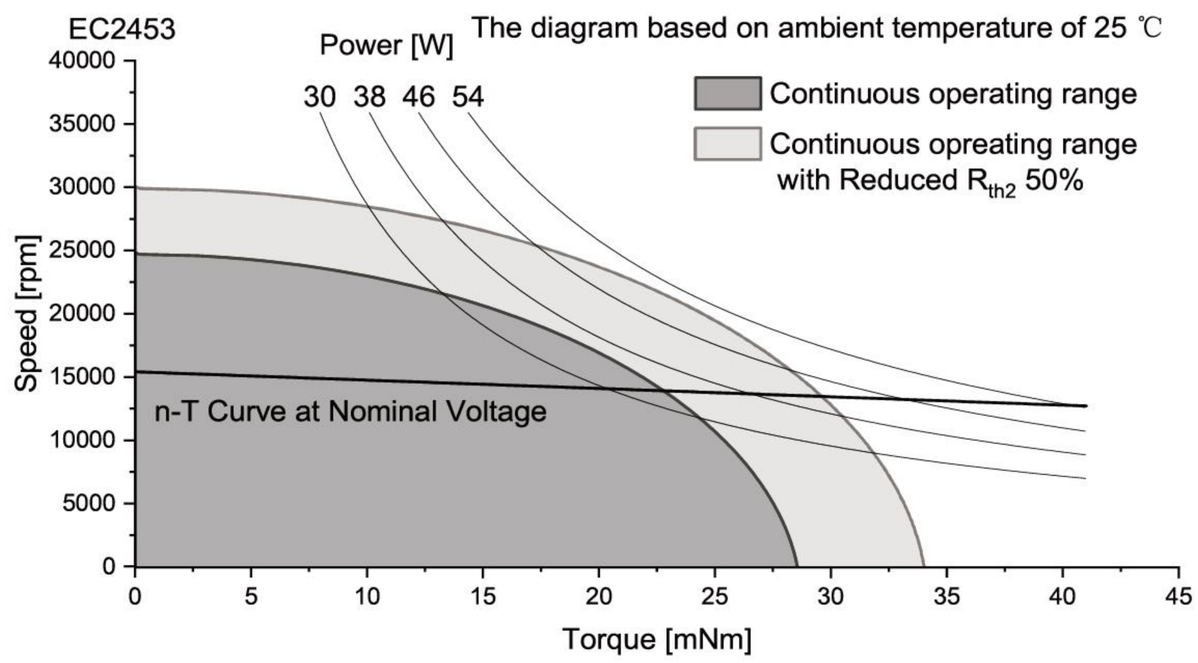

Connection

Conection A (Sensor)		PVC	
Pin 1	Vhall 3-18 VDC	AWG26	black
Pin 2	Hall sensor HA	AWG26	black
Pin 3	Hall sensor HB	AWG26	black
Pin 4	Hall sensor HC	AWG26	black
Pin 5	GND	AWG26	black
Pin 6	Motor winding MA	AWG26	black
Pin 7	Motor winding MB	AWG26	black
Pin 8	Motor winding MC	AWG26	black
Conector			
JST	PH2.0-8P		
Conection B (Sensorless)		PVC	
Pin 1	Motor winding MA	AWG26	yellow
Pin 2	Motor winding MB	AWG26	green
Pin 3	Motor winding MC	AWG26	blue

Configuration

Performance: Customized in the continuous operating range
Ball bearing: Preload
Flange: Standard frange front&back/customize the frange
Shaft: Length/Diameter/Cut face/double shaft/hollow shaft
Leadwire: PVC/Silicon/Teflon/UL No/Dimension/length
Connector: JST/MOLEX/TE

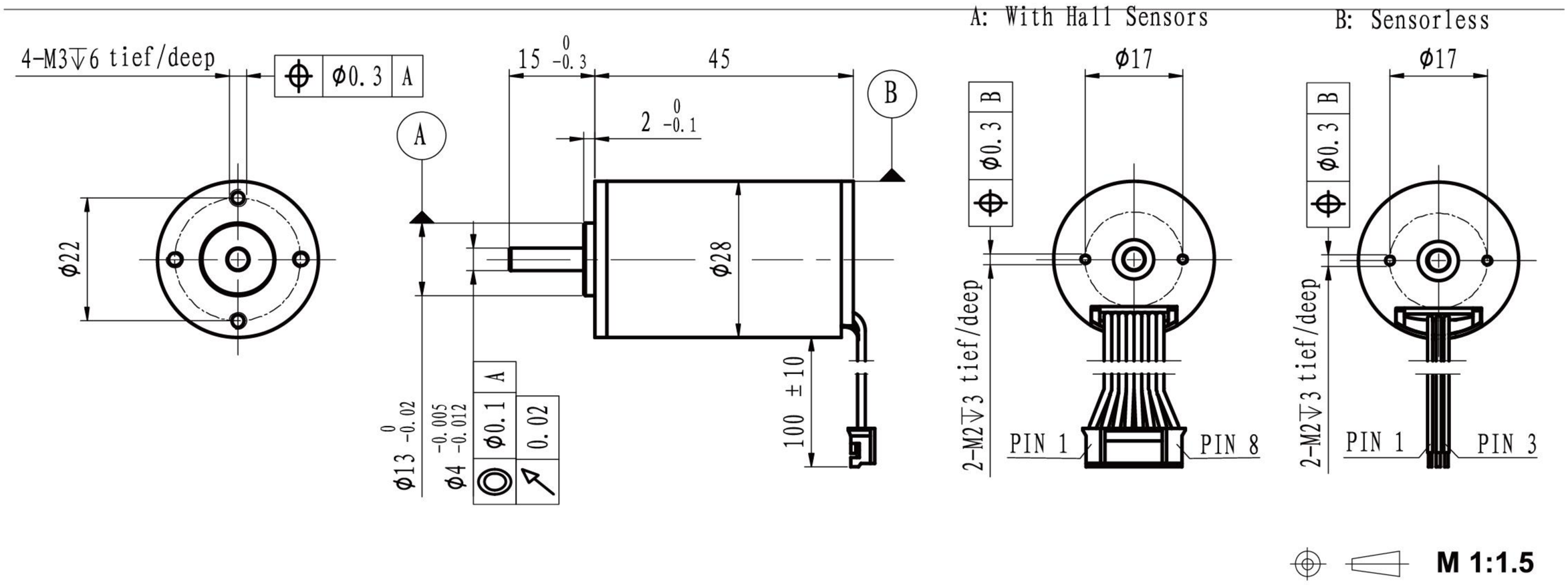

	Sensorless / With hall sensor	EC2845L-… / EC2845S-…	1213	2413	3613	4813				
Motor data										
Values at nominal voltage										
1	Nominal voltage	V	12	24	36	48				
2	No load speed	rpm	13737	13756	13783	13400				
3	No load current	mA	202	128	84	79				
4	Nominal speed	rpm	12225	12342	12432	11903				
5	Nominal torque	mNm	18	18	18	18				
6	Nominal current	A	2.38	1.22	0.81	0.61				
7	Stall torque	mNm	163.48	175.07	183.68	161.16				
8	Stall current	A	20.00	10.76	7.53	4.87				
9	Max. efficiency	%	80.9	79.4	80.0	76.1				
10	Terminal resistance	Ω	0.6	2.23	4.78	9.86				
11	Terminal inductance	mH	0.08	0.34	0.73	1.47				
12	Torque constant	mNm/A	8.26	16.46	24.66	33.65				
13	Speed constant	rpm/V	1156	580	387	284				
14	Speed/torque gradient	rpm/mNm	84	79	75	83				
15	Mechanical time constant	ms	4.6	4.3	4.1	4.5				
16	Rotor inertia	gcm^2	5.2	5.2	5.2	5.2				

17	Thermal resistance housing-ambient	9.6 K/W
18	Thermal resistance winding-housing	6.3 K/W
19	Thermal time constant winding	37 s
20	Thermal time constant motor	584 s
21	Ambient temprature	-30…+100℃
22	Max. permissible winding temperature	+150℃
23	Max. permissible speed	25000 rpm
24	Axial play at axial load <8 N	0 mm
	>8 N	max. 0.3 mm
25	Radial play	preloaded
26	Max. axial load (dynamic)	7.5 N
27	Max.force for press fits (static)	100 N
	(static, shaft supported)	2000 N
28	Max. radial loading, 5mm from flange	25 N
29	Number of pole pairs	1
30	Number of phases	3
31	Weight of motor	120 g

Operating Range

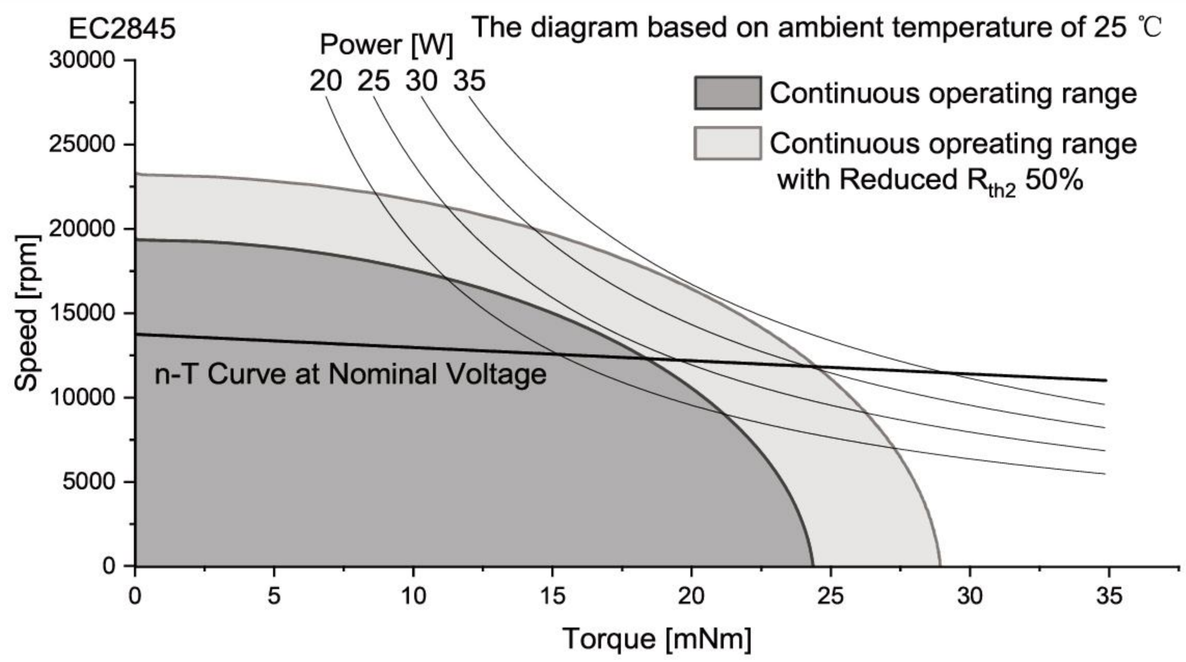

Connection

Conection A (Sensor) PVC

Pin 1	Vhall 3-18 VDC	AWG26	black
Pin 2	Hall sensor HA	AWG26	black
Pin 3	Hall sensor HB	AWG26	black
Pin 4	Hall sensor HC	AWG26	black
Pin 5	GND	AWG26	black
Pin 6	Motor winding MA	AWG26	black
Pin 7	Motor winding MB	AWG26	black
Pin 8	Motor winding MC	AWG26	black

Conector
JST PH2.0-8P

Conection B (Sensorless) PVC

Pin 1	Motor winding MA	AWG26	yellow
Pin 2	Motor winding MB	AWG26	green
Pin 3	Motor winding MC	AWG26	blue

Configuration

Performance: Customized in the continuous operating range
Ball bearing: Preload
Flange: Standard frange front&back/customize the frange
Shaft: Length/Diameter/Cut face/double shaft/hollow shaft
Leadwire: PVC/Silicon/Teflon/UL No/Dimension/length
Connector: JST/MOLEX/TE

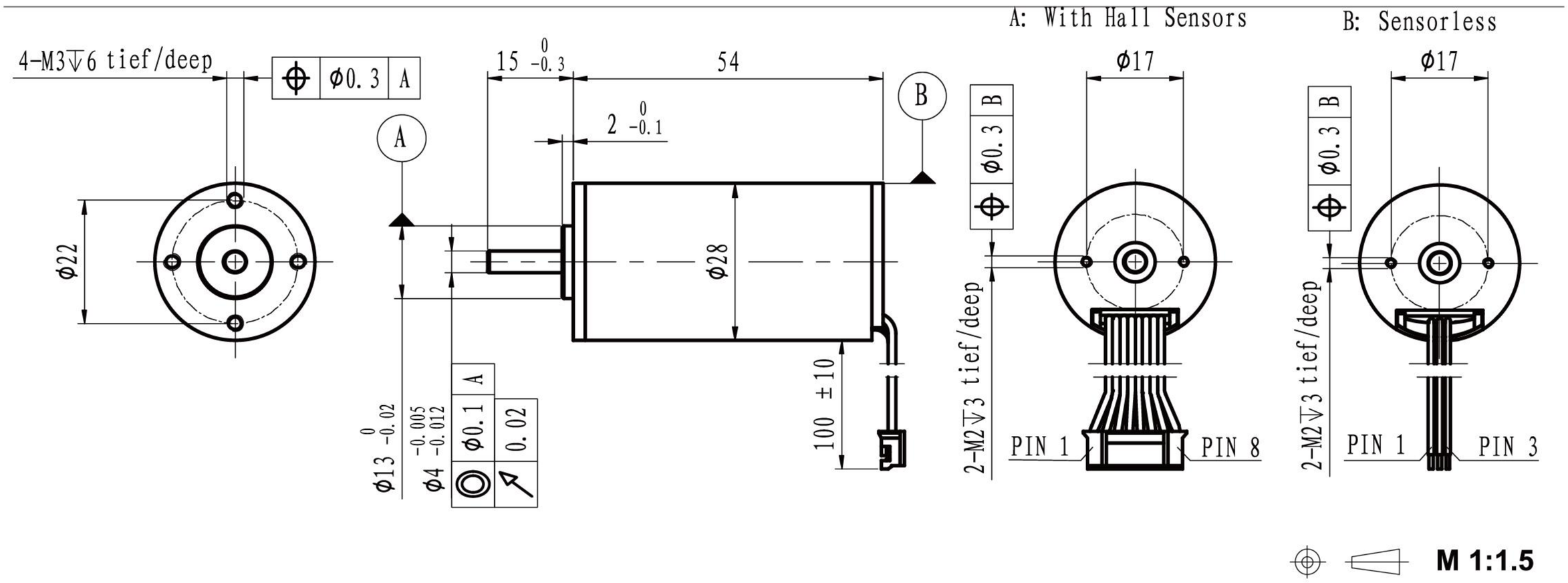

	Sensorless / With hall sensor	EC2854L-… / EC2854S-…	1212	2412	3612	4812				
Motor data										
Values at nominal voltage										
1	Nominal voltage	V	12	24	36	48				
2	No load speed	rpm	12039	12238	12100	12066				
3	No load current	mA	410	190	125	90				
4	Nominal speed	rpm	10716	10874	10961	10693				
5	Nominal torque	mNm	35	35	35	35				
6	Nominal current	A	4.13	2.08	1.37	1.02				
7	Stall torque	mNm	318.59	313.96	371.75	307.58				
8	Stall current	A	34.29	17.14	13.33	8.28				
9	Max. efficiency	%	79.3	80.1	81.6	80.2				
10	Terminal resistance	Ω	0.35	1.4	2.7	5.8				
11	Terminal inductance	mH	0.16	0.61	1.41	2.56				
12	Torque constant	mNm/A	9.40	18.52	28.14	37.58				
13	Speed constant	rpm/V	1015	516	339	254				
14	Speed/torque gradient	rpm/mNm	38	39	33	39				
15	Mechanical time constant	ms	3.4	3.5	2.9	3.5				
16	Rotor inertia	gcm^2	8.5	8.5	8.5	8.5				

17	Thermal resistance housing-ambient	7.1 K/W
18	Thermal resistance winding-housing	5 K/W
19	Thermal time constant winding	51 s
20	Thermal time constant motor	552 s
21	Ambient temprature	-30…+100℃
22	Max. permissible winding temperature	+150℃
23	Max. permissible speed	25000 rpm
24	Axial play at axial load <8 N	0 mm
	>8 N	max. 0.3 mm
25	Radial play	preloaded
26	Max. axial load (dynamic)	7.5 N
27	Max.force for press fits (static)	100 N
	(static, shaft supported)	2000 N
28	Max. radial loading, 5mm from flange	25 N
29	Number of pole pairs	1
30	Number of phases	3
31	Weight of motor	156 g

Operating Range

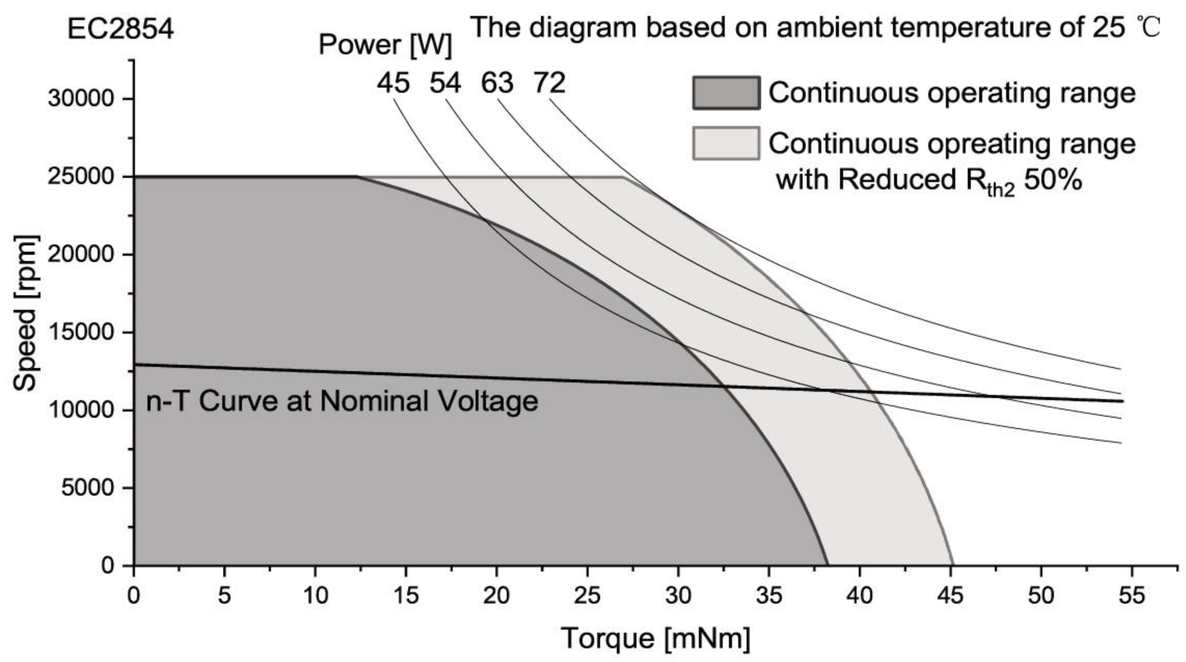

Connection

Conection A (Sensor)		PVC	
Pin 1	Vhall 3-18 VDC	AWG26	black
Pin 2	Hall sensor HA	AWG26	black
Pin 3	Hall sensor HB	AWG26	black
Pin 4	Hall sensor HC	AWG26	black
Pin 5	GND	AWG26	black
Pin 6	Motor winding MA	AWG26	black
Pin 7	Motor winding MB	AWG26	black
Pin 8	Motor winding MC	AWG26	black
Conector			
JST	PH2.0-8P		
Conection B (Sensorless)		PVC	
Pin 1	Motor winding MA	AWG26	yellow
Pin 2	Motor winding MB	AWG26	green
Pin 3	Motor winding MC	AWG26	blue

Configuration

Performance: Customized in the continuous operating range
Ball bearing: Preload
Flange: Standard frange front&back/customize the frange
Shaft: Length/Diameter/Cut face/double shaft/hollow shaft
Leadwire: PVC/Silicon/Teflon/UL No/Dimension/length
Connector: JST/MOLEX/TE

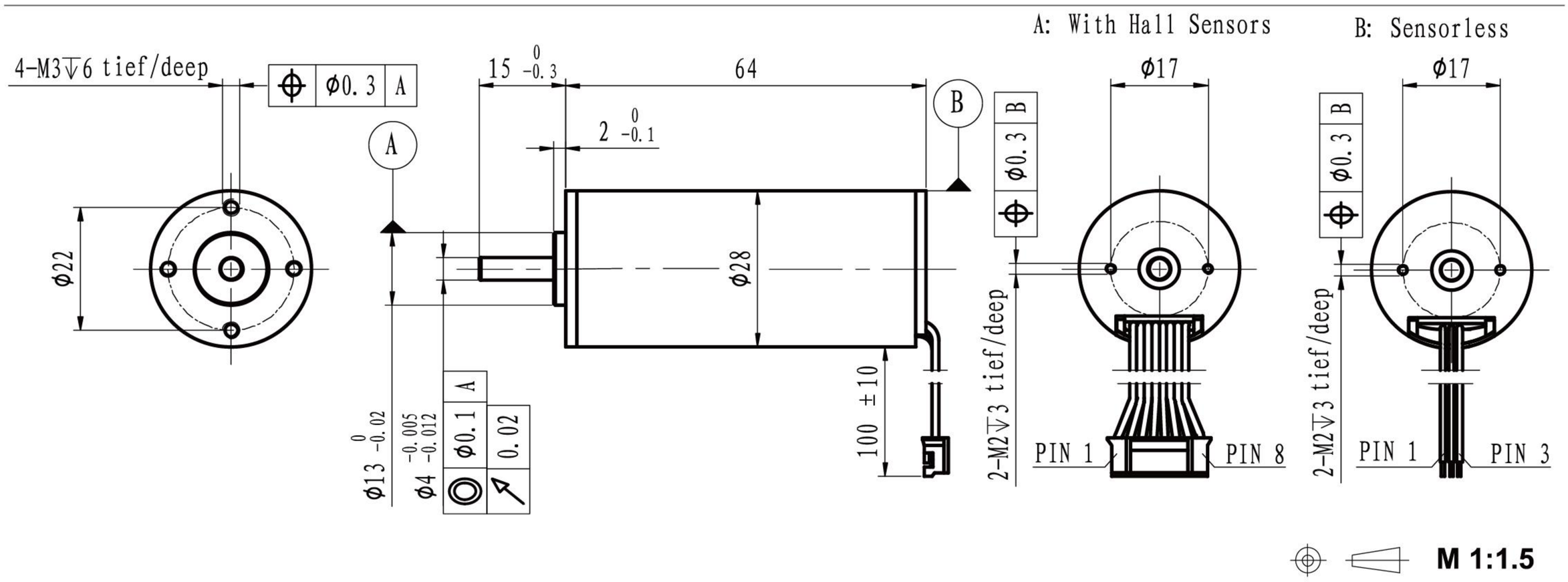

		Sensorless With hall sensor	EC2864L-… EC2864S-…	1212	2412	3612	4812				
Motor data											
Values at nominal voltage											
1	Nominal voltage		V	12	24	36	48				
2	No load speed		rpm	12210	12100	12021	12305				
3	No load current		mA	460	240	170	120				
4	Nominal speed		rpm	10828	10853	10843	11008				
5	Nominal torque		mNm	50	50	50	50				
6	Nominal current		A	5.84	2.90	1.93	1.47				
7	Stall torque		mNm	441.89	485.06	510.28	474.35				
8	Stall current		A	48.00	26.09	18.18	12.97				
9	Max. efficiency		%	81.4	81.7	81.6	81.7				
10	Terminal resistance		Ω	0.25	0.92	1.98	3.7				
11	Terminal inductance		mH	0.11	0.46	0.46	0.96				
12	Torque constant		mNm/A	9.30	18.77	28.33	36.91				
13	Speed constant		rpm/V	1027	509	337	259				
14	Speed/torque gradient		rpm/mNm	28	25	24	26				
15	Mechanical time constant		ms	2.8	2.5	2.4	2.6				
16	Rotor inertia		gcm^2	9.6	9.6	9.6	9.6				

17	Thermal resistance housing-ambient		5.5 K/W
18	Thermal resistance winding-housing		4 K/W
19	Thermal time constant winding		56 s
20	Thermal time constant motor		521 s
21	Ambient temprature		-30…+100℃
22	Max. permissible winding temperature		+150℃
23	Max. permissible speed		25000 rpm
24	Axial play at axial load	<8 N	0 mm
		>8 N	max. 0.3 mm
25	Radial play		preloaded
26	Max. axial load (dynamic)		7.5 N
27	Max.force for press fits (static)		100 N
	(static, shaft supported)		2000 N
28	Max. radial loading, 5mm from flange		25 N
29	Number of pole pairs		1
30	Number of phases		3
31	Weight of motor		195 g

Operating Range

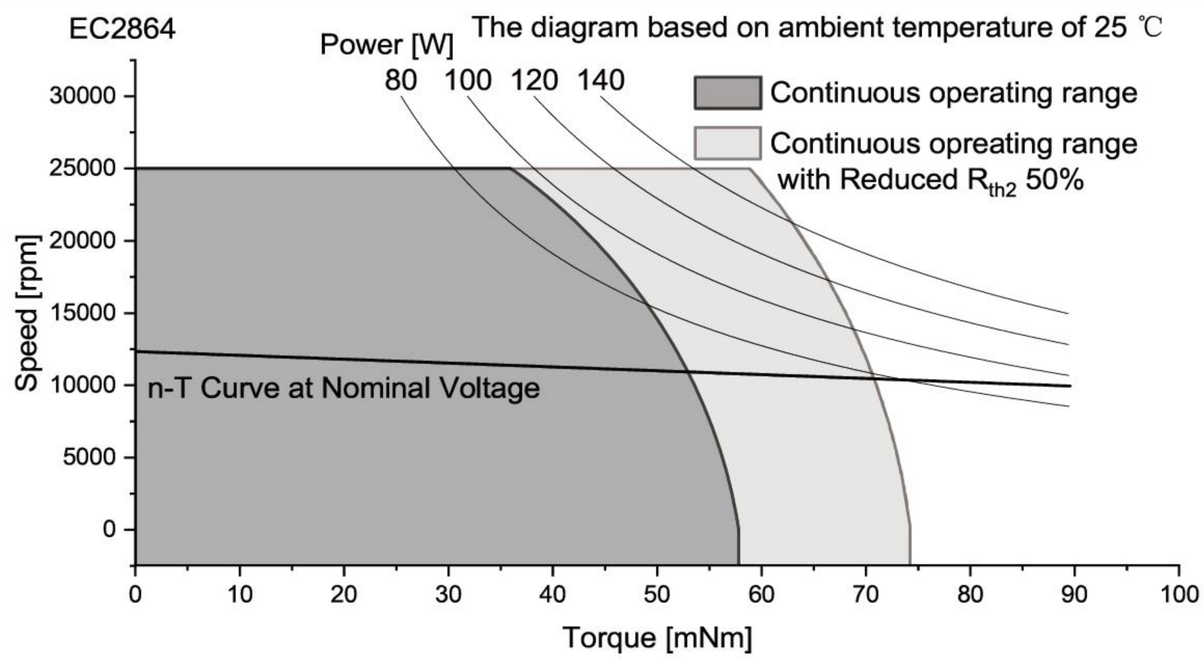

Connection

Conection A (Sensor)		PVC	
Pin 1	Vhall 3-18 VDC	AWG26	black
Pin 2	Hall sensor HA	AWG26	black
Pin 3	Hall sensor HB	AWG26	black
Pin 4	Hall sensor HC	AWG26	black
Pin 5	GND	AWG26	black
Pin 6	Motor winding MA	AWG26	black
Pin 7	Motor winding MB	AWG26	black
Pin 8	Motor winding MC	AWG26	black
Conector			
JST	PH2.0-8P		
Conection B (Sensorless)		PVC	
Pin 1	Motor winding MA	AWG26	yellow
Pin 2	Motor winding MB	AWG26	green
Pin 3	Motor winding MC	AWG26	blue

Configuration

Performance: Customized in the continuous operating range
Ball bearing: Preload
Flange: Standard frange front&back/customize the frange
Shaft: Length/Diameter/Cut face/double shaft/hollow shaft
Leadwire: PVC/Silicon/Teflon/UL No/Dimension/length
Connector: JST/MOLEX/TE

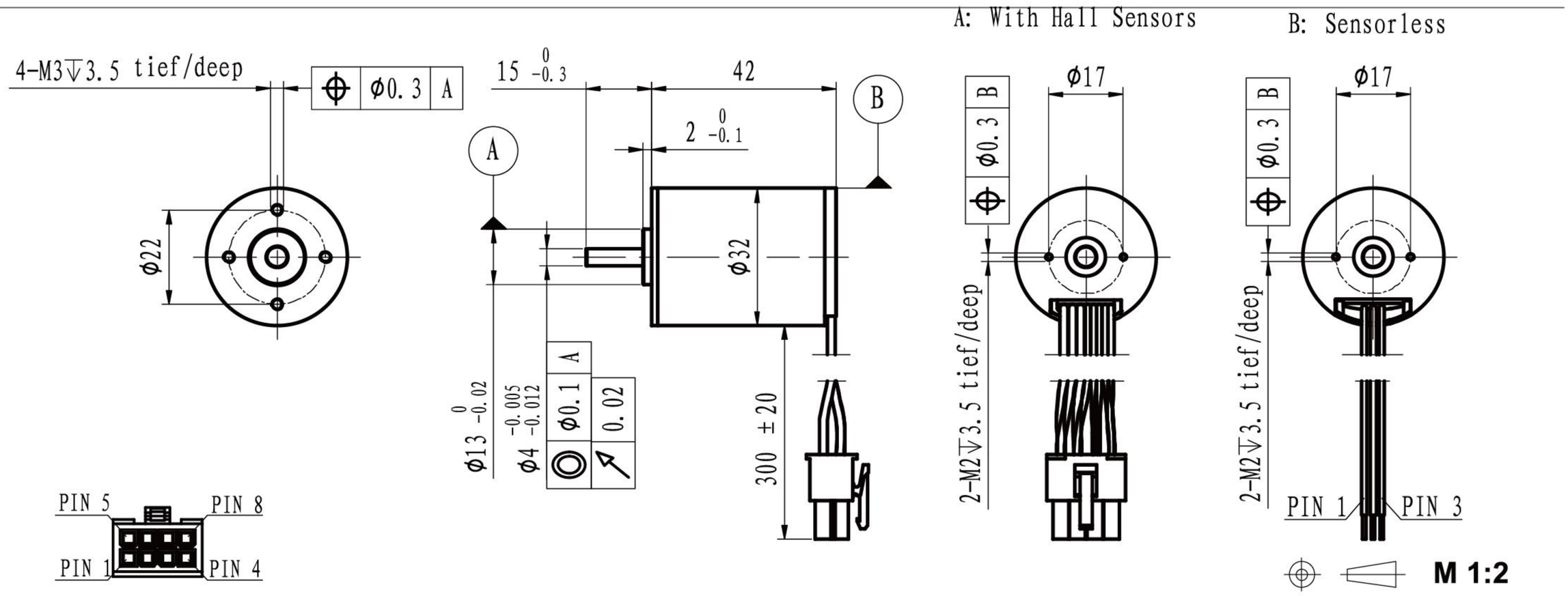

	Sensorless With hall sensor	EC3242L-… EC3242S-…	1209	2409	3609	4809				
Motor data										
Values at nominal voltage										
1	Nominal voltage	V	12	24	36	48				
2	No load speed	rpm	9319	9516	9269	9389				
3	No load current	mA	380	210	120	90				
4	Nominal speed	rpm	8198	8364	8219	8120				
5	Nominal torque	mNm	25	25	25	25				
6	Nominal current	A	2.46	1.27	0.81	0.61				
7	Stall torque	mNm	207.75	206.49	220.60	184.98				
8	Stall current	A	17.65	8.99	6.19	3.97				
9	Max. efficiency	%	72.8	71.8	74.1	72.1				
10	Terminal resistance	Ω	0.68	2.67	5.82	12.1				
11	Terminal inductance	mH	0.11	0.4	0.98	1.79				
12	Torque constant	mNm/A	12.03	23.52	36.37	47.71				
13	Speed constant	rpm/V	794	406	263	200				
14	Speed/torque gradient	rpm/mNm	45	46	42	51				
15	Mechanical time constant	ms	4.4	4.5	4.1	5.0				
16	Rotor inertia	gcm^2	9.4	9.4	9.4	9.4				

17	Thermal resistance housing-ambient		8.8 K/W
18	Thermal resistance winding-housing		2.7 K/W
19	Thermal time constant winding		23.5 s
20	Thermal time constant motor		560 s
21	Ambient temprature		-30…+100℃
22	Max. permissible winding temperature		+150℃
23	Max. permissible speed		25000 rpm
24	Axial play at axial load	<8 N	0 mm
		>8 N	max. 0.3 mm
25	Radial play		preloaded
26	Max. axial load (dynamic)		7.5 N
27	Max.force for press fits (static)		100 N
	(static, shaft supported)		2700 N
28	Max. radial loading, 5mm from flange		25 N
29	Number of pole pairs		1
30	Number of phases		3
31	Weight of motor		147 g

Operating Range

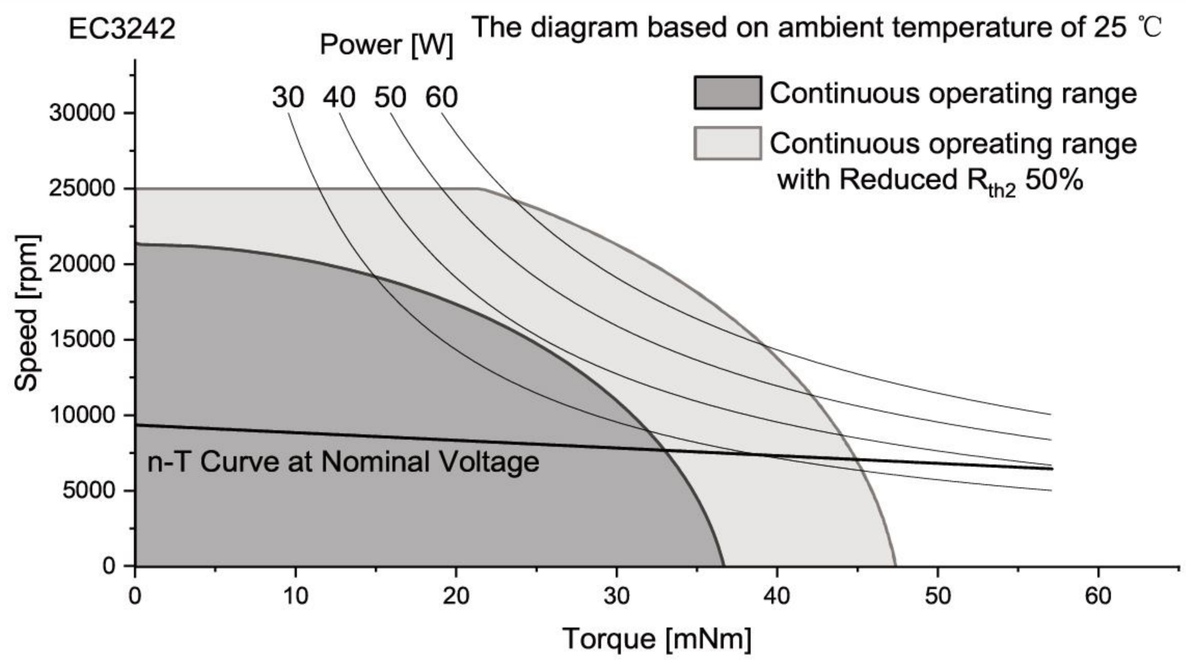

Connection

Conection A (Sensor) PTFE

Pin 1	Motor winding MB	AWG20	Green
Pin 2	Vhall 3-18 VDC	AWG26	Red
Pin 3	Hall sensor HA	AWG26	Yellow
Pin 4	Hall sensor HC	AWG26	Blue
Pin 5	Motor winding MA	AWG20	Yellow
Pin 6	Motor winding MC	AWG20	Blue
Pin 7	GND	AWG26	Black
Pin 8	Hall sensor HB	AWG26	Green

Conector
Molex5557-8P

Conection B (Sensorless) PTFE

Pin 1	Motor winding MA	AWG20	Yellow
Pin 2	Motor winding MB	AWG20	Green
Pin 3	Motor winding MC	AWG20	Blue

Configuration

Performance: Customized in the continuous operating range
Ball bearing: Preload
Flange: Standard frange front&back/customize the frange
Shaft: Length/Diameter/Cut face/double shaft/hollow shaft
Leadwire: PVC/Silicon/Teflon/UL No/Dimension/length
Connector: JST/MOLEX/TE

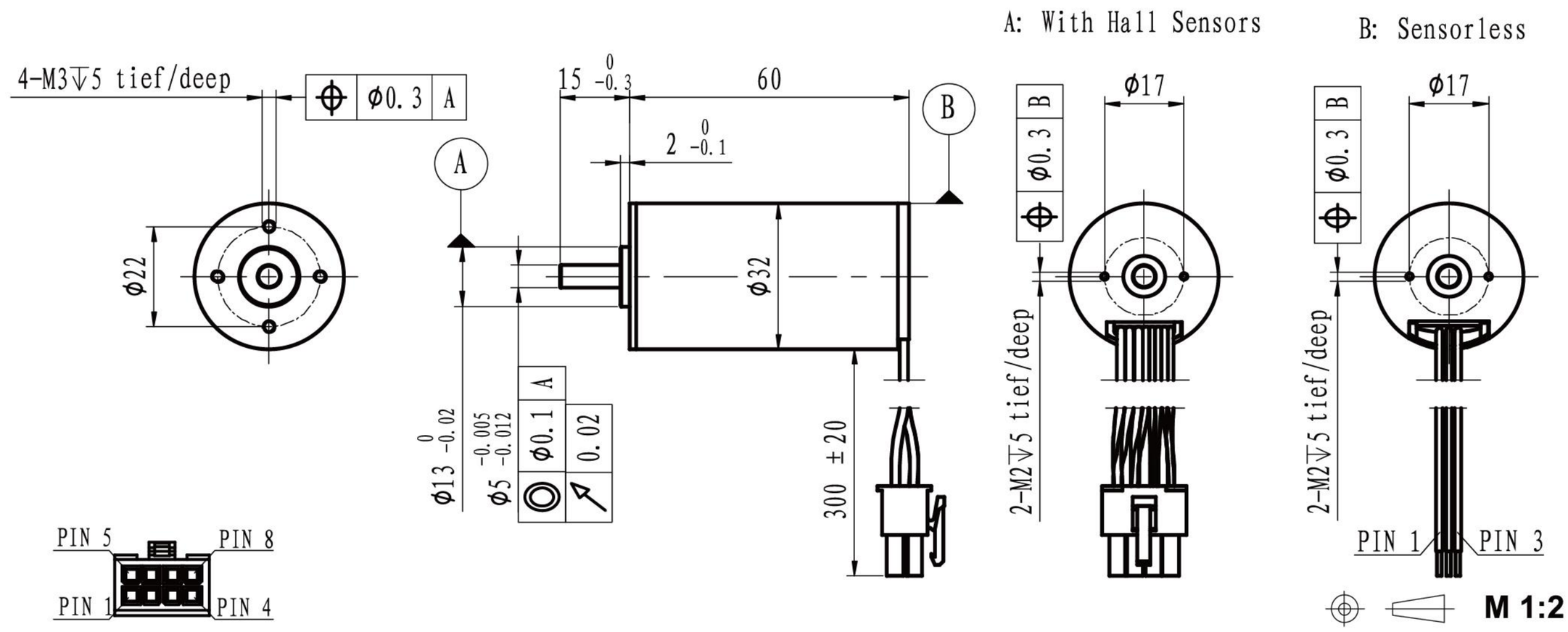

	Sensorless With hall sensor	EC3260L-… EC3260S-…	1211	2411	3611	4811				
Motor data										
Values at nominal voltage										
1	Nominal voltage	V	12	24	36	48				
2	No load speed	rpm	10845	11038	10937	11125				
3	No load current	mA	430	190	130	90				
4	Nominal speed	rpm	9889	10027	9931	10087				
5	Nominal torque	mNm	50	50	50	50				
6	Nominal current	A	5.20	2.62	1.73	1.31				
7	Stall torque	mNm	567.29	545.82	543.84	535.92				
8	Stall current	A	54.55	26.67	17.56	13.19				
9	Max. efficiency	%	83.0	83.8	83.5	84.2				
10	Terminal resistance	Ω	0.22	0.9	2.05	3.64				
11	Terminal inductance	mH	0.08	0.32	0.9	1.22				
12	Torque constant	mNm/A	10.48	20.62	31.20	40.92				
13	Speed constant	rpm/V	911	463	306	233				
14	Speed/torque gradient	rpm/mNm	19	20	20	21				
15	Mechanical time constant	ms	3.1	3.3	3.3	3.4				
16	Rotor inertia	gcm^2	15.5	15.5	15.5	15.5				

17	Thermal resistance housing-ambient		6 K/W
18	Thermal resistance winding-housing		3.2 K/W
19	Thermal time constant winding		36 s
20	Thermal time constant motor		626 s
21	Ambient temprature		-30…+100℃
22	Max. permissible winding temperature		+150℃
23	Max. permissible speed		25000 rpm
24	Axial play at axial load	<8 N	0 mm
		>8 N	max. 0.3 mm
25	Radial play		preloaded
26	Max. axial load (dynamic)		7.5 N
27	Max.force for press fits (static)		100 N
	(static, shaft supported)		2700 N
28	Max. radial loading, 5mm from flange		25 N
29	Number of pole pairs		1
30	Number of phases		3
31	Weight of motor		217 g

Operating Range

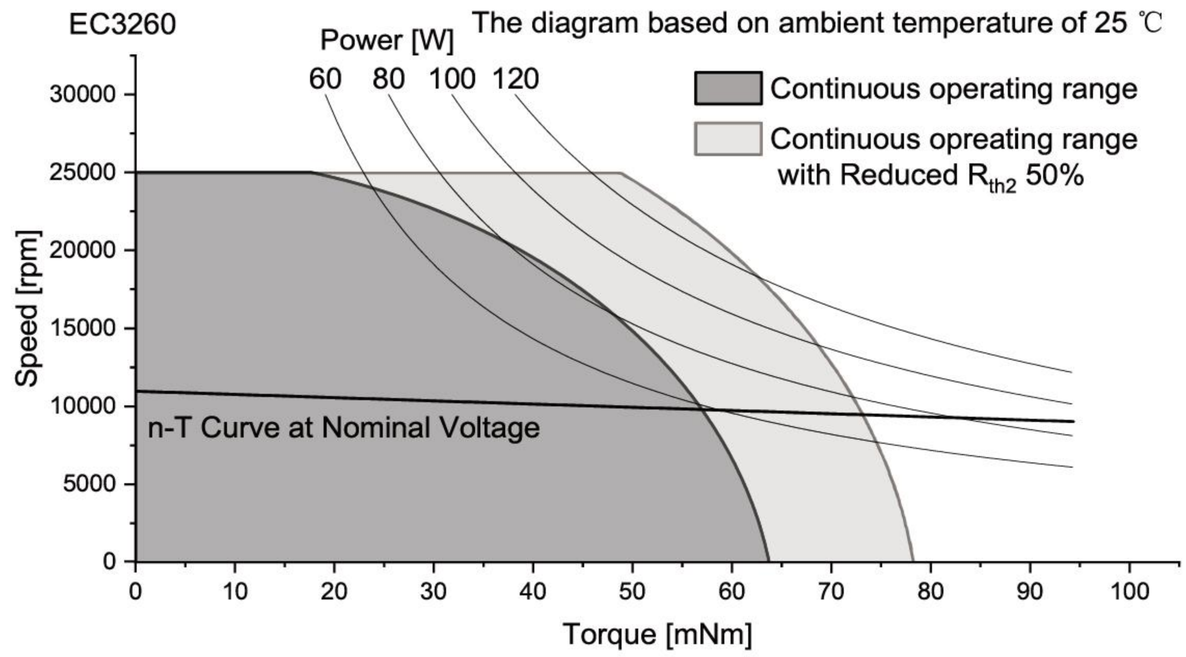

Connection

Conection A (Sensor) PTFE

Pin 1	Motor winding MB	AWG20	Green
Pin 2	Vhall 3-18 VDC	AWG26	Red
Pin 3	Hall sensor HA	AWG26	Yellow
Pin 4	Hall sensor HC	AWG26	Blue
Pin 5	Motor winding MA	AWG20	Yellow
Pin 6	Motor winding MC	AWG20	Blue
Pin 7	GND	AWG26	Black
Pin 8	Hall sensor HB	AWG26	Green

Conector
Molex5557-8P

Conection B (Sensorless) PTFE

Pin 1	Motor winding MA	AWG20	Yellow
Pin 2	Motor winding MB	AWG20	Green
Pin 3	Motor winding MC	AWG20	Blue

Configuration

Performance: Customized in the continuous operating range
Ball bearing: Preload
Flange: Standard frange front&back/customize the frange
Shaft: Length/Diameter/Cut face/double shaft/hollow shaft
Leadwire: PVC/Silicon/Teflon/UL No/Dimension/length
Connector: JST/MOLEX/TE

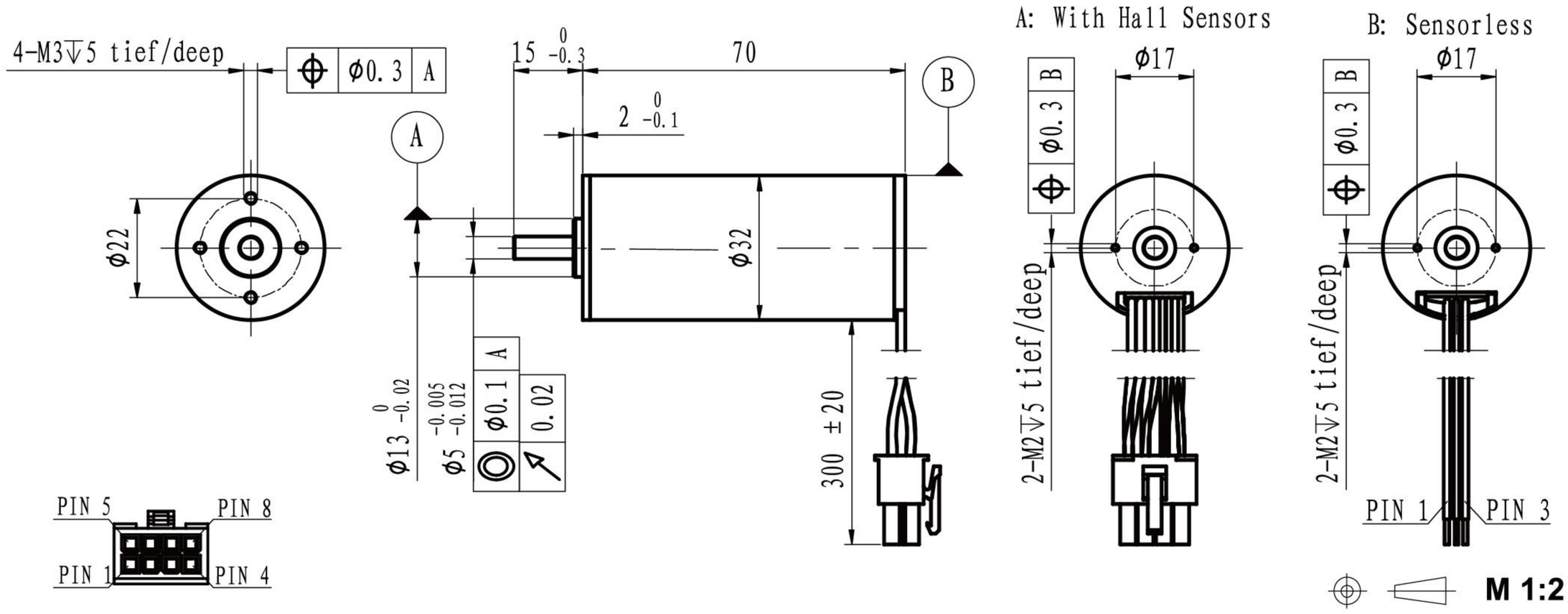

	Sensorless With hall sensor	EC3270L-… EC3270S-…	1209	2409	3609	4809				
Motor data										
Values at nominal voltage										
1	Nominal voltage	V	12	24	36	48				
2	No load speed	rpm	8998	9055	9252	9080				
3	No load current	mA	450	180	100	90				
4	Nominal speed	rpm	7991	7963	8129	8077				
5	Nominal torque	mNm	70	70	70	70				
6	Nominal current	A	6.00	2.97	2.00	1.49				
7	Stall torque	mNm	625.35	580.67	576.72	633.67				
8	Stall current	A	50.00	23.30	15.72	12.73				
9	Max. efficiency	%	81.9	83.2	84.7	83.9				
10	Terminal resistance	Ω	0.24	1.03	2.29	3.77				
11	Terminal inductance	mH	0.09	0.35	0.75	1.33				
12	Torque constant	mNm/A	12.62	25.11	36.92	50.12				
13	Speed constant	rpm/V	757	380	259	191				
14	Speed/torque gradient	rpm/mNm	14	16	16	14				
15	Mechanical time constant	ms	2.8	3.0	3.1	2.8				
16	Rotor inertia	gcm^2	18.5	18.5	18.5	18.5				

17	Thermal resistance housing-ambient	4.7 K/W
18	Thermal resistance winding-housing	2.9 K/W
19	Thermal time constant winding	38 s
20	Thermal time constant motor	568 s
21	Ambient temprature	-30…+100℃
22	Max. permissible winding temperature	+150℃
23	Max. permissible speed	25000 rpm
24	Axial play at axial load <8 N	0 mm
	>8 N	max. 0.3 mm
25	Radial play	preloaded
26	Max. axial load (dynamic)	7.5 N
27	Max.force for press fits (static)	100 N
	(static, shaft supported)	2700 N
28	Max. radial loading, 5mm from flange	25 N
29	Number of pole pairs	1
30	Number of phases	3
31	Weight of motor	256 g

Operating Range

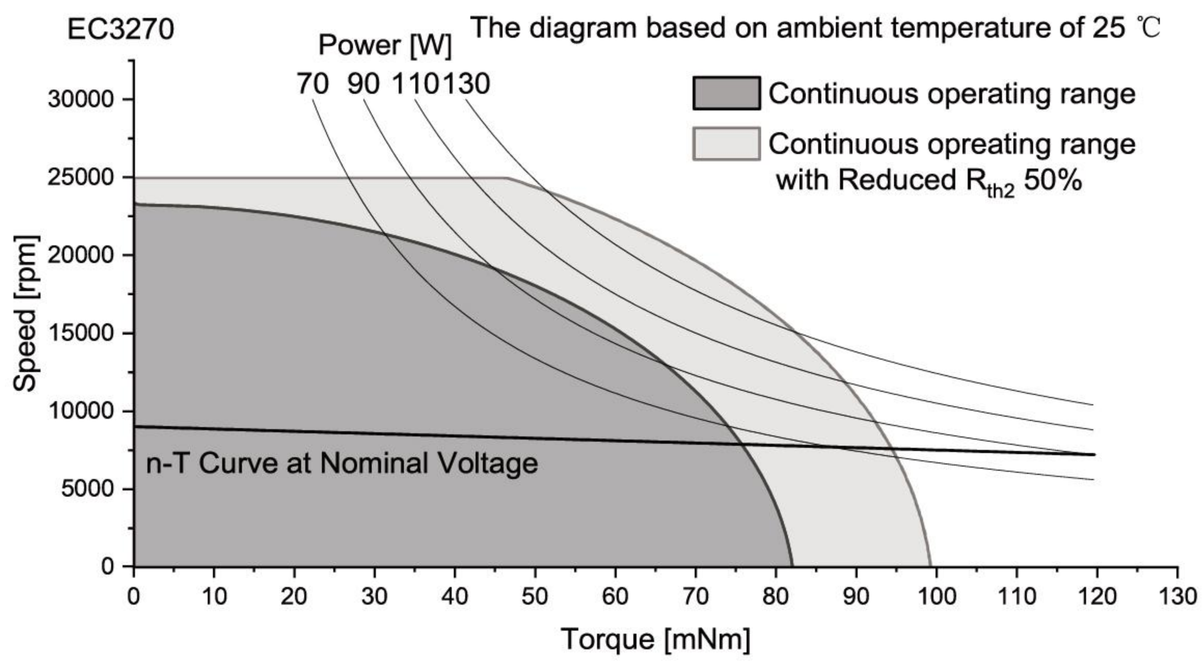

Connection

Conection A (Sensor)		PTFE	
Pin 1	Motor winding MB	AWG20	Green
Pin 2	Vhall 3-18 VDC	AWG26	Red
Pin 3	Hall sensor HA	AWG26	Yellow
Pin 4	Hall sensor HC	AWG26	Blue
Pin 5	Motor winding MA	AWG20	Yellow
Pin 6	Motor winding MC	AWG20	Blue
Pin 7	GND	AWG26	Black
Pin 8	Hall sensor HB	AWG26	Green
Conector			
Molex5557-8P			
Conection B (Sensorless)		PTFE	
Pin 1	Motor winding MA	AWG20	Yellow
Pin 2	Motor winding MB	AWG20	Green
Pin 3	Motor winding MC	AWG20	Blue

Configuration

Performance: Customized in the continuous operating range
Ball bearing: Preload
Flange: Standard frange front&back/customize the frange
Shaft: Length/Diameter/Cut face/double shaft/hollow shaft
Leadwire: PVC/Silicon/Teflon/UL No/Dimension/length
Connector: JST/MOLEX/TE

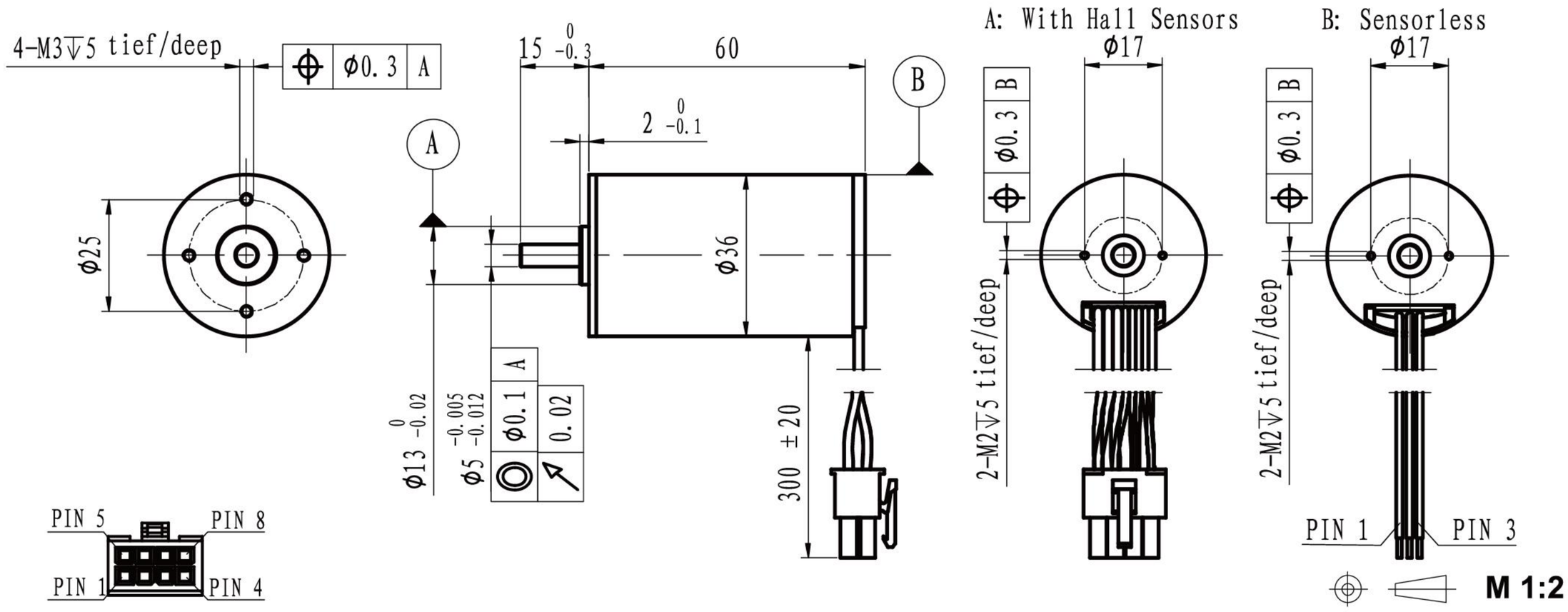

	Sensorless With hall sensor	EC3660L-… EC3660S-…	1208	2408	3608	4808				
Motor data										
Values at nominal voltage										
1	Nominal voltage	V	12	24	36	48				
2	No load speed	rpm	8050	8140	8014	8083				
3	No load current	mA	288	148	101	84				
4	Nominal speed	rpm	6794	6784	6804	6766				
5	Nominal torque	mNm	82	82	82	82				
6	Nominal current	A	6.09	3.08	2.03	1.54				
7	Stall torque	mNm	525.64	492.24	542.90	503.13				
8	Stall current	A	37.50	17.78	12.86	9.04				
9	Max. efficiency	%	83.2	82.6	83.1	81.6				
10	Terminal resistance	Ω	0.32	1.35	2.8	5.31				
11	Terminal inductance	mH	0.09	0.38	0.88	1.6				
12	Torque constant	mNm/A	14.13	27.92	42.56	56.18				
13	Speed constant	rpm/V	676	342	224	170				
14	Speed/torque gradient	rpm/mNm	15	17	15	16				
15	Mechanical time constant	ms	3.1	3.4	3.0	3.3				
16	Rotor inertia	gcm^2	19.5	19.5	19.5	19.5				

17	Thermal resistance housing-ambient		4.4 K/W
18	Thermal resistance winding-housing		1.3 K/W
19	Thermal time constant winding		15 s
20	Thermal time constant motor		582 s
21	Ambient temprature		-30…+100℃
22	Max. permissible winding temperature		+150℃
23	Max. permissible speed		20000 rpm
24	Axial play at axial load	<8 N	0 mm
		>8 N	max. 0.3 mm
25	Radial play		preloaded
26	Max. axial load (dynamic)		7.5 N
27	Max.force for press fits (static)		100 N
	(static, shaft supported)		2700 N
28	Max. radial loading, 5mm from flange		25 N
29	Number of pole pairs		1
30	Number of phases		3
31	Weight of motor		272 g

Operating Range

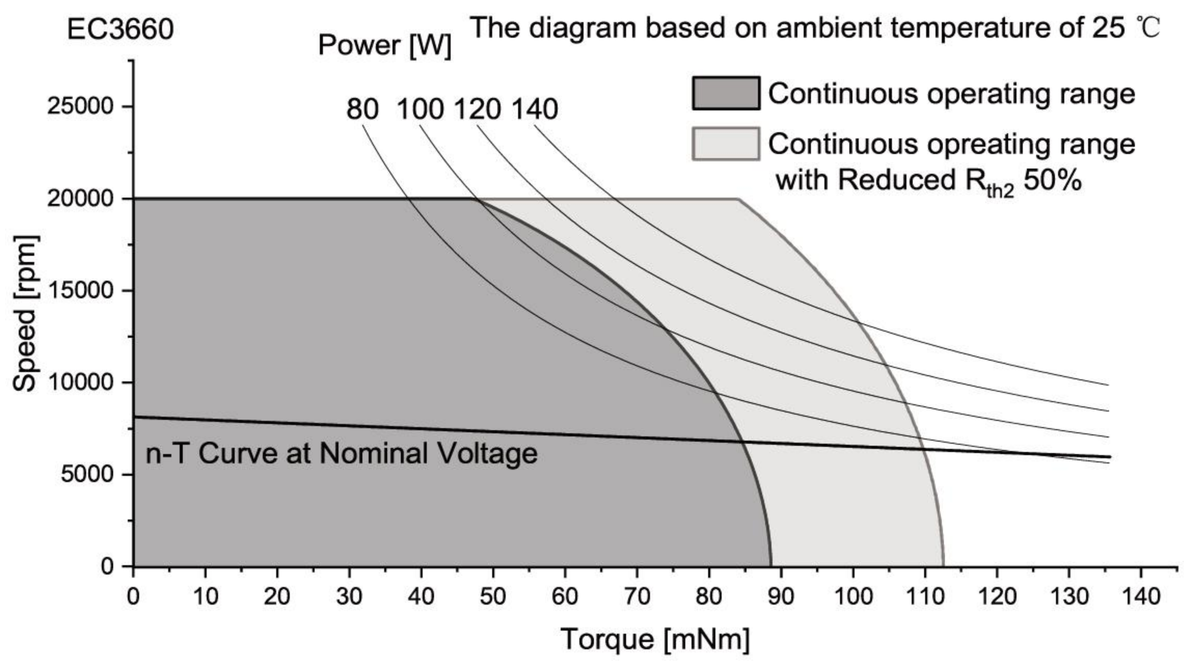

Connection

Conection A (Sensor)		PTFE	
Pin 1	Motor winding MB	AWG20	Green
Pin 2	Vhall 3-18 VDC	AWG26	Red
Pin 3	Hall sensor HA	AWG26	Yellow
Pin 4	Hall sensor HC	AWG26	Blue
Pin 5	Motor winding MA	AWG20	Yellow
Pin 6	Motor winding MC	AWG20	Blue
Pin 7	GND	AWG26	Black
Pin 8	Hall sensor HB	AWG26	Green
Conector			
Molex5557-8P			
Conection B (Sensorless)		PTFE	
Pin 1	Motor winding MA	AWG20	Yellow
Pin 2	Motor winding MB	AWG20	Green
Pin 3	Motor winding MC	AWG20	Blue

Configuration

Performance: Customized in the continuous operating range
Ball bearing: Preload
Flange: Standard frange front&back/customize the frange
Shaft: Length/Diameter/Cut face/double shaft/hollow shaft
Leadwire: PVC/Silicon/Teflon/UL No/Dimension/length
Connector: JST/MOLEX/TE

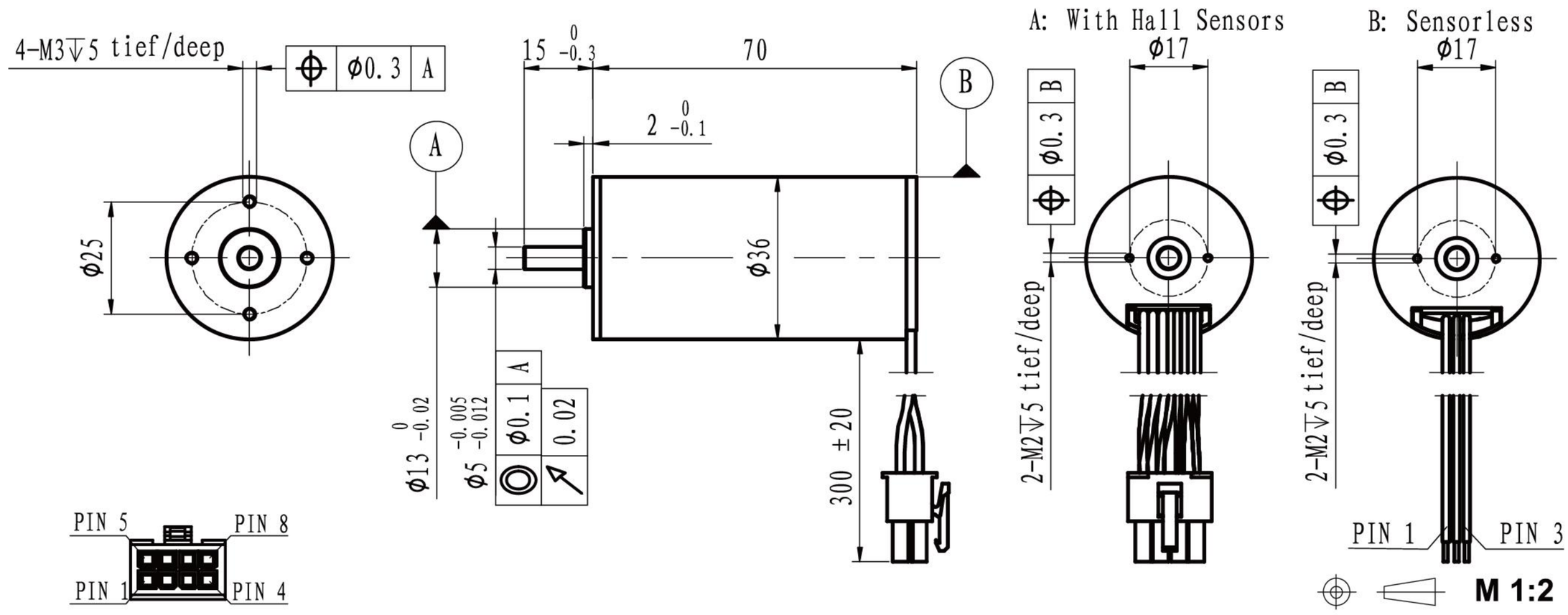

	Sensorless With hall sensor	EC3670L-… EC3670S-…	1208	2408	3608	4808				
Motor data										
Values at nominal voltage										
1	Nominal voltage	V	12	24	36	48				
2	No load speed	rpm	6578	6555	6675	6545				
3	No load current	mA	293	137	101	78				
4	Nominal speed	rpm	5312	5395	5455	5401				
5	Nominal torque	mNm	120	120	120	120				
6	Nominal current	A	7.24	3.59	2.45	1.81				
7	Stall torque	mNm	623.30	678.25	656.57	686.54				
8	Stall current	A	36.36	19.67	12.95	9.96				
9	Max. efficiency	%	82.9	84.0	83.1	83.1				
10	Terminal resistance	Ω	0.33	1.22	2.78	4.82				
11	Terminal inductance	mH	0.09	0.38	0.85	1.52				
12	Torque constant	mNm/A	17.28	34.72	51.10	69.48				
13	Speed constant	rpm/V	553	275	187	137				
14	Speed/torque gradient	rpm/mNm	11	10	10	10				
15	Mechanical time constant	ms	2.4	2.2	2.3	2.1				
16	Rotor inertia	gcm^2	21.5	21.5	21.5	21.5				

17	Thermal resistance housing-ambient	3.5 K/W
18	Thermal resistance winding-housing	0.9 K/W
19	Thermal time constant winding	14.3 s
20	Thermal time constant motor	558 s
21	Ambient temprature	-30…+100℃
22	Max. permissible winding temperature	+150℃
23	Max. permissible speed	20000 rpm
24	Axial play at axial load <8 N	0 mm
	>8 N	max. 0.3 mm
25	Radial play	preloaded
26	Max. axial load (dynamic)	7.5 N
27	Max.force for press fits (static)	100 N
	(static, shaft supported)	2700 N
28	Max. radial loading, 5mm from flange	25 N
29	Number of pole pairs	1
30	Number of phases	3
31	Weight of motor	331 g

Operating Range

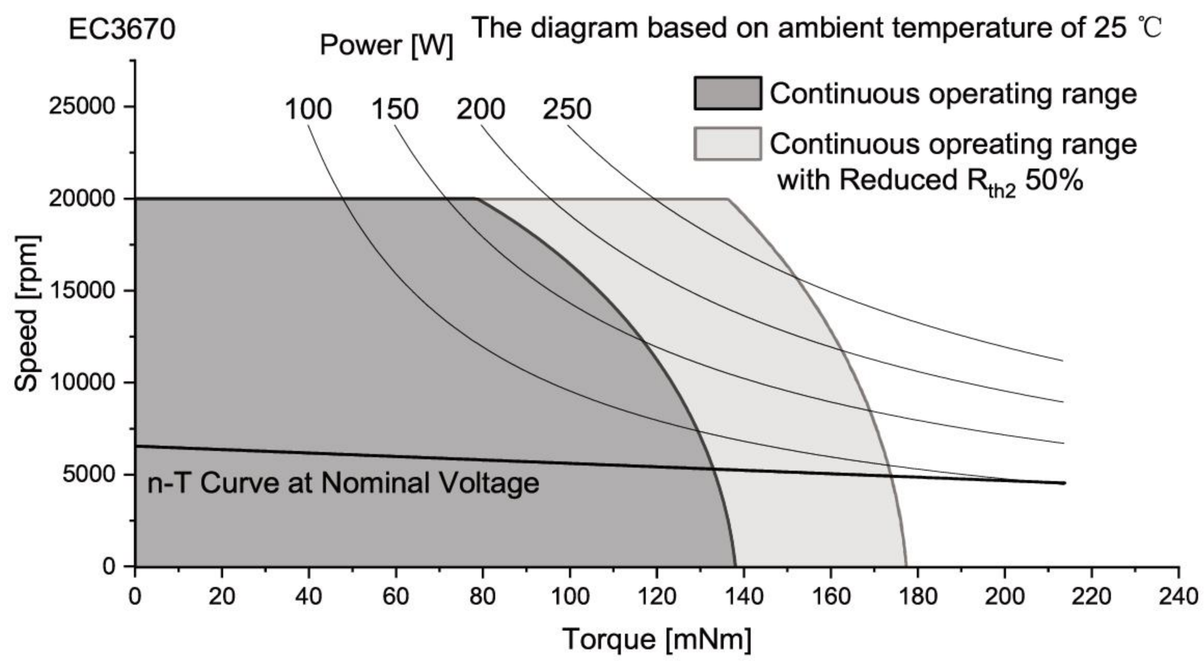

Connection

Conection A (Sensor) PTFE

Pin 1	Motor winding MB	AWG20	Green
Pin 2	Vhall 3-18 VDC	AWG26	Red
Pin 3	Hall sensor HA	AWG26	Yellow
Pin 4	Hall sensor HC	AWG26	Blue
Pin 5	Motor winding MA	AWG20	Yellow
Pin 6	Motor winding MC	AWG20	Blue
Pin 7	GND	AWG26	Black
Pin 8	Hall sensor HB	AWG26	Green

Conector
Molex5557-8P

Conection B (Sensorless) PTFE

Pin 1	Motor winding MA	AWG20	Yellow
Pin 2	Motor winding MB	AWG20	Green
Pin 3	Motor winding MC	AWG20	Blue

Configuration

Performance: Customized in the continuous operating range
Ball bearing: Preload
Flange: Standard frange front&back/customize the frange
Shaft: Length/Diameter/Cut face/double shaft/hollow shaft
Leadwire: PVC/Silicon/Teflon/UL No/Dimension/length
Connector: JST/MOLEX/TE

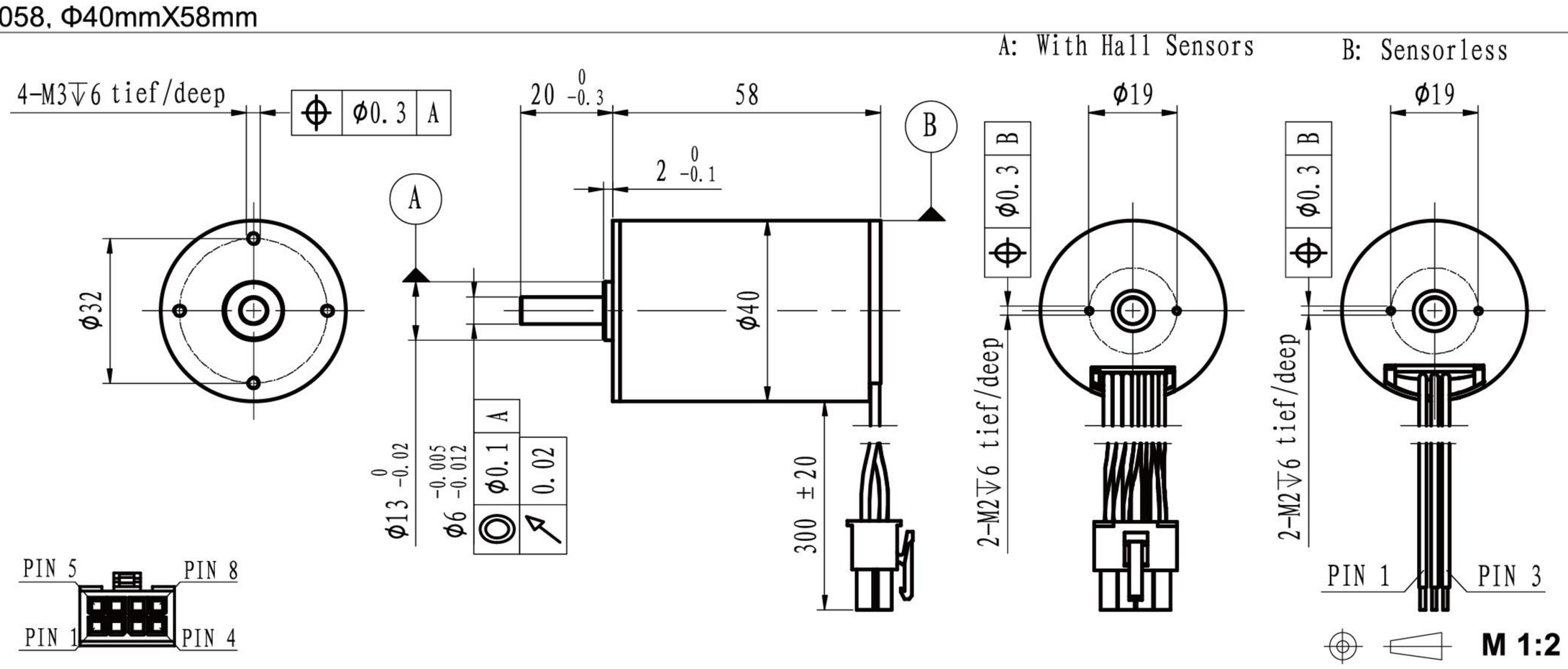

	Sensorless With hall sensor	EC4058L-… EC4058S-…	1208	2408	3608	4808				
Motor data										
Values at nominal voltage										
1	Nominal voltage	V	12	24	36	48				
2	No load speed	rpm	7958	7890	7962	8001				
3	No load current	mA	480	200	170	110				
4	Nominal speed	rpm	7000	6912	6943	6986				
5	Nominal torque	mNm	85	85	85	85				
6	Nominal current	A	6.44	3.15	2.16	1.61				
7	Stall torque	mNm	706.22	685.56	664.16	669.80				
8	Stall current	A	50.00	24.00	15.72	11.91				
9	Max. efficiency	%	81.4	82.6	80.3	81.7				
10	Terminal resistance	Ω	0.24	1	2.29	4.03				
11	Terminal inductance	mH	0.11	0.46	0.97	1.67				
12	Torque constant	mNm/A	14.26	28.81	42.71	56.76				
13	Speed constant	rpm/V	670	332	224	168				
14	Speed/torque gradient	rpm/mNm	11	12	12	12				
15	Mechanical time constant	ms	4.7	3.6	3.7	3.7				
16	Rotor inertia	gcm^2	39.6	29.6	29.6	29.6				

17	Thermal resistance housing-ambient	4.7 K/W
18	Thermal resistance winding-housing	2.2 K/W
19	Thermal time constant winding	35 s
20	Thermal time constant motor	777 s
21	Ambient temprature	-30…+100℃
22	Max. permissible winding temperature	+150℃
23	Max. permissible speed	17500 rpm
24	Axial play at axial load <10N	0 mm
	>10N	max. 0.3 mm
25	Radial play	preloaded
26	Max. axial load (dynamic)	9 N
27	Max.force for press fits (static)	170 N
	(static, shaft supported)	4500 N
28	Max. radial loading, 5mm from flange	80 N
29	Number of pole pairs	1
30	Number of phases	3
31	Weight of motor	338 g

Operating Range

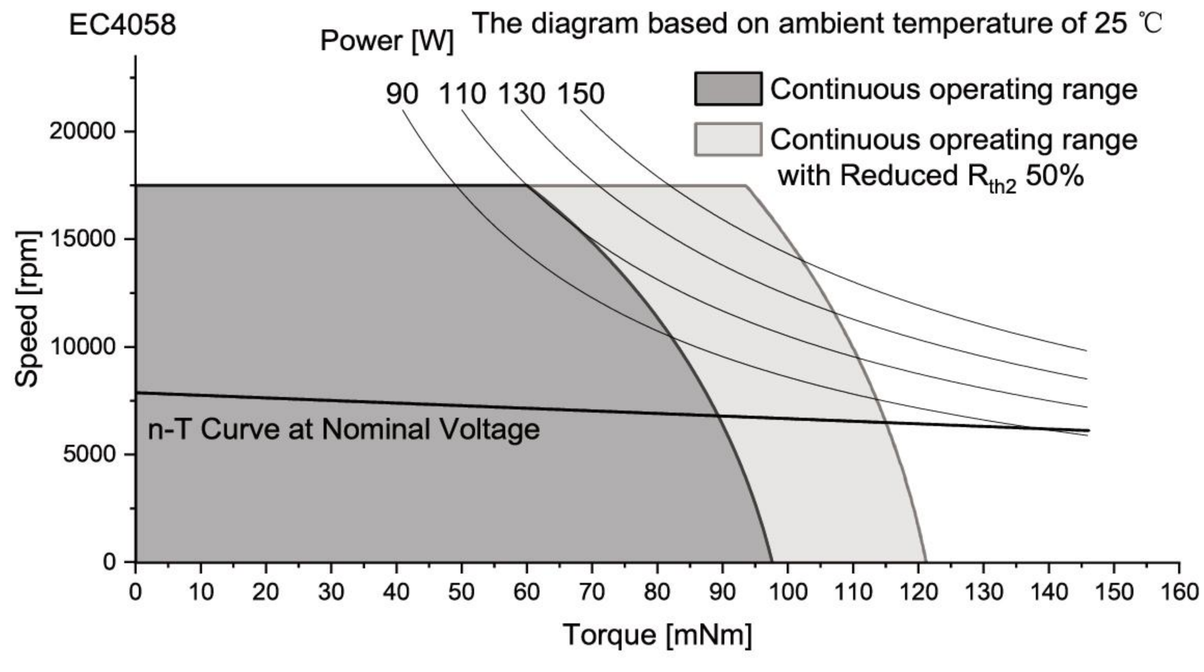

Connection

Conection A (Sensor) PTFE

Pin 1	Motor winding MB	AWG20	Green
Pin 2	Vhall 3-18 VDC	AWG26	Red
Pin 3	Hall sensor HA	AWG26	Yellow
Pin 4	Hall sensor HC	AWG26	Blue
Pin 5	Motor winding MA	AWG20	Yellow
Pin 6	Motor winding MC	AWG20	Blue
Pin 7	GND	AWG26	Black
Pin 8	Hall sensor HB	AWG26	Green

Conector
Molex5557-8P

Conection B (Sensorless) PTFE

Pin 1	Motor winding MA	AWG20	Yellow
Pin 2	Motor winding MB	AWG20	Green
Pin 3	Motor winding MC	AWG20	Blue

Configuration

Performance: Customized in the continuous operating range
Ball bearing: Preload
Flange: Standard frange front&back/customize the frange
Shaft: Length/Diameter/Cut face/double shaft/hollow shaft
Leadwire: PVC/Silicon/Teflon/UL No/Dimension/length
Connector: JST/MOLEX/TE

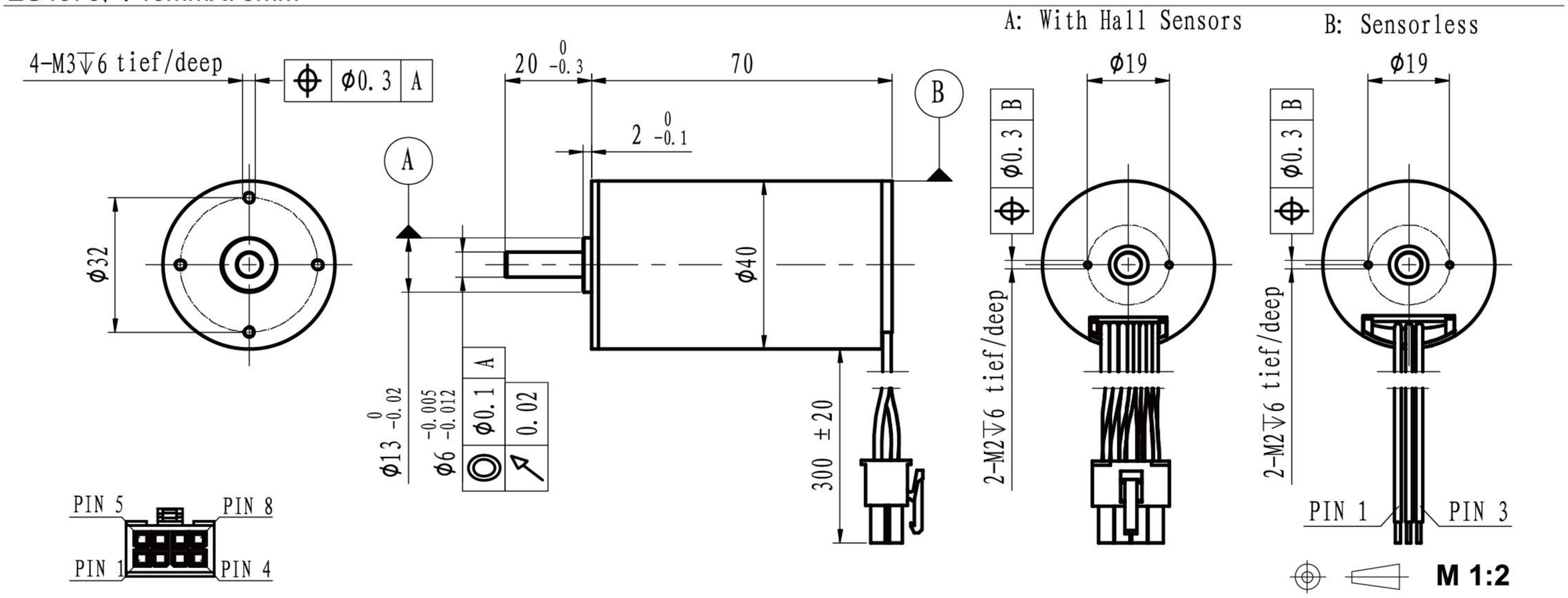

	Sensorless With hall sensor	EC4070L-… EC4070S-…	1208	2408	3608	4808				
Motor data										
Values at nominal voltage										
1	Nominal voltage	V	12	24	36	48				
2	No load speed	rpm	6154	8102	8113	8061				
3	No load current	mA	264	200	190	130				
4	Nominal speed	rpm	5066	7304	7266	7238				
5	Nominal torque	mNm	130	130	130	130				
6	Nominal current	A	7.29	4.82	3.28	2.43				
7	Stall torque	mNm	735.0	1319.9	1244.6	1272.7				
8	Stall current	A	40.00	47.06	29.75	22.64				
9	Max. efficiency	%	84.4	87.4	84.7	85.4				
10	Terminal resistance	Ω	0.3	0.51	1.21	2.12				
11	Terminal inductance	mH	0.11	0.3	0.66	1.2				
12	Torque constant	mNm/A	18.50	28.17	42.10	56.54				
13	Speed constant	rpm/V	516	339	227	169				
14	Speed/torque gradient	rpm/mNm	8	6	7	6				
15	Mechanical time constant	ms	3.5	2.5	2.7	2.6				
16	Rotor inertia	gcm^2	39.4	39.4	39.4	39.4				

17	Thermal resistance housing-ambient	3.8 K/W
18	Thermal resistance winding-housing	1.5 K/W
19	Thermal time constant winding	33 s
20	Thermal time constant motor	775 s
21	Ambient temprature	-30…+100℃
22	Max. permissible winding temperature	+150℃
23	Max. permissible speed	17500 rpm
24	Axial play at axial load <10N	0 mm
	>10N	max. 0.3 mm
25	Radial play	preloaded
26	Max. axial load (dynamic)	9 N
27	Max.force for press fits (static)	170 N
	(static, shaft supported)	4500 N
28	Max. radial loading, 5mm from flange	80 N
29	Number of pole pairs	1
30	Number of phases	3
31	Weight of motor	415 g

Operating Range

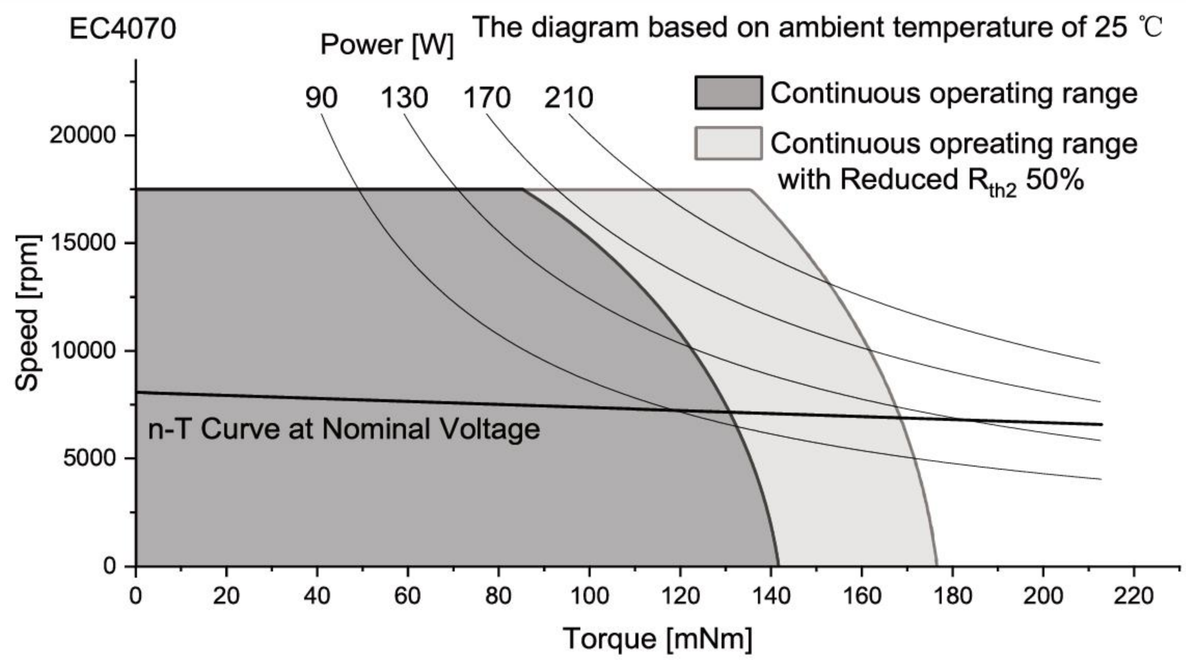

Connection

Conection A (Sensor) PTFE

Pin 1	Motor winding MB	AWG20	Green
Pin 2	Vhall 3-18 VDC	AWG26	Red
Pin 3	Hall sensor HA	AWG26	Yellow
Pin 4	Hall sensor HC	AWG26	Blue
Pin 5	Motor winding MA	AWG20	Yellow
Pin 6	Motor winding MC	AWG20	Blue
Pin 7	GND	AWG26	Black
Pin 8	Hall sensor HB	AWG26	Green

Conector
Molex5557-8P

Conection B (Sensorless) PTFE

Pin 1	Motor winding MA	AWG20	Yellow
Pin 2	Motor winding MB	AWG20	Green
Pin 3	Motor winding MC	AWG20	Blue

Configuration

Performance: Customized in the continuous operating range
Ball bearing: Preload
Flange: Standard frange front&back/customize the frange
Shaft: Length/Diameter/Cut face/double shaft/hollow shaft
Leadwire: PVC/Silicon/Teflon/UL No/Dimension/length
Connector: JST/MOLEX/TE

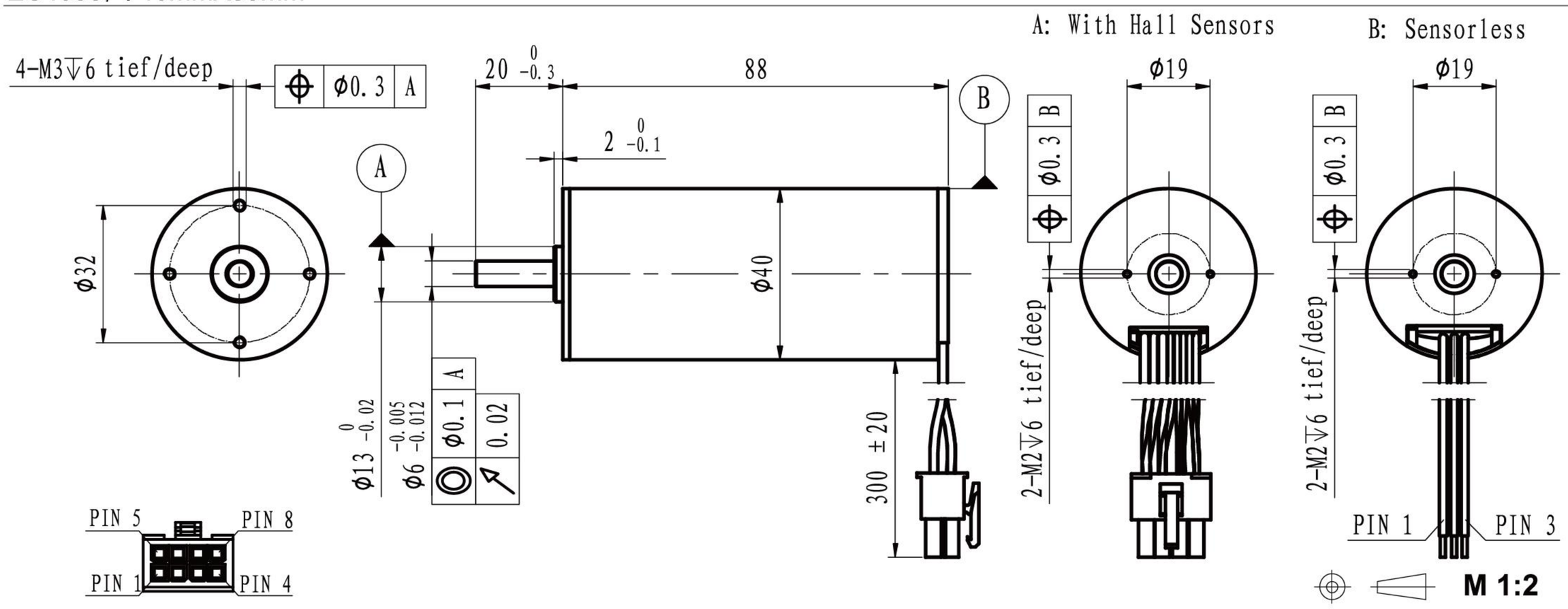

		Sensorless EC4088L-… / With hall sensor EC4088S-…	2408	3608	4808					
Motor data										
Values at nominal voltage										
1	Nominal voltage	V	24	36	48					
2	No load speed	rpm	7921	8032	8081					
3	No load current	mA	440	290	200					
4	Nominal speed	rpm	7299	7379	7452					
5	Nominal torque	mNm	200	200	200					
6	Nominal current	A	7.39	4.99	3.74					
7	Stall torque	mNm	2546.5	2460.4	2570.3					
8	Stall current	A	88.89	58.06	45.71					
9	Max. efficiency	%	86.4	86.4	87.2					
10	Terminal resistance	Ω	0.27	0.62	1.05					
11	Terminal inductance	mH	0.18	0.38	0.78					
12	Torque constant	mNm/A	28.79	42.59	56.47					
13	Speed constant	rpm/V	332	224	169					
14	Speed/torque gradient	rpm/mNm	3	3	3					
15	Mechanical time constant	ms	1.8	1.8	1.8					
16	Rotor inertia	gcm^2	54.1	54.1	54.1					

17	Thermal resistance housing-ambient	3.0 K/W
18	Thermal resistance winding-housing	0.6 K/W
19	Thermal time constant winding	48 s
20	Thermal time constant motor	996 s
21	Ambient temprature	-30…+100℃
22	Max. permissible winding temperature	+150℃
23	Max. permissible speed	17500 rpm
24	Axial play at axial load <10N	0 mm
	>10N	max. 0.3 mm
25	Radial play	preloaded
26	Max. axial load (dynamic)	9 N
27	Max.force for press fits (static)	170 N
	(static, shaft supported)	4500 N
28	Max. radial loading, 5mm from flange	80 N
29	Number of pole pairs	1
30	Number of phases	3
31	Weight of motor	571 g

Operating Range

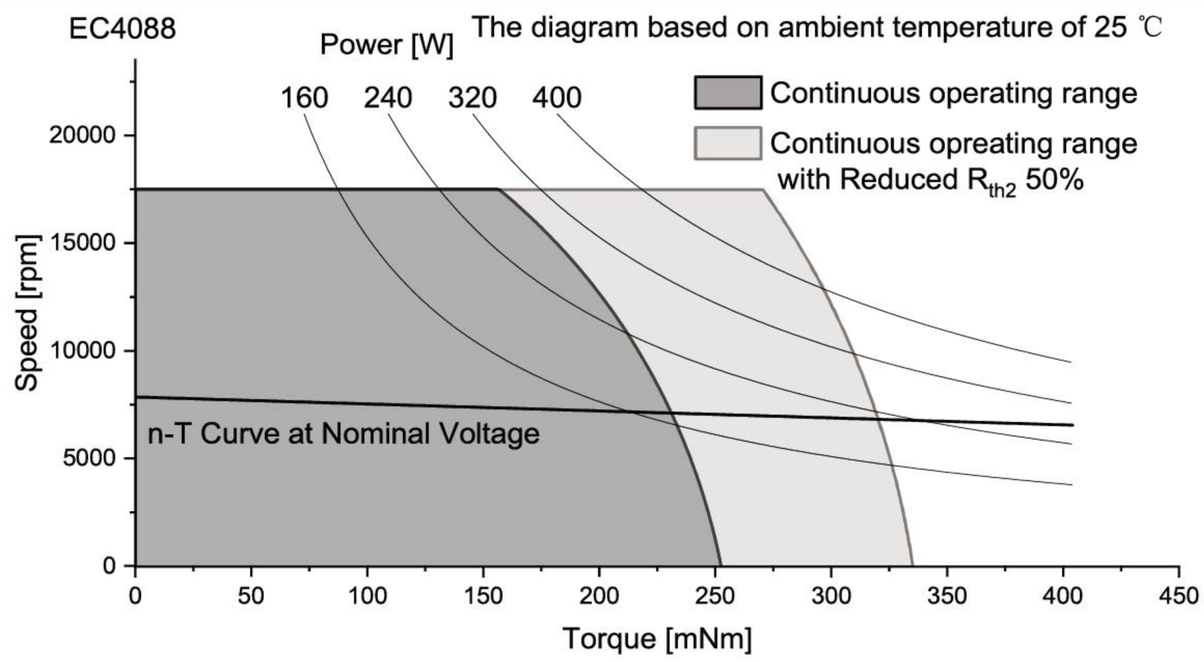

Connection

Conection A (Sensor) PTFE

Pin 1	Motor winding MB	AWG20	Green
Pin 2	Vhall 3-18 VDC	AWG26	Red
Pin 3	Hall sensor HA	AWG26	Yellow
Pin 4	Hall sensor HC	AWG26	Blue
Pin 5	Motor winding MA	AWG20	Yellow
Pin 6	Motor winding MC	AWG20	Blue
Pin 7	GND	AWG26	Black
Pin 8	Hall sensor HB	AWG26	Green

Conector
Molex5557-8P

Conection B (Sensorless) PTFE

Pin 1	Motor winding MA	AWG20	Yellow
Pin 2	Motor winding MB	AWG20	Green
Pin 3	Motor winding MC	AWG20	Blue

Configuration

Performance: Customized in the continuous operating range
Ball bearing: Preload
Flange: Standard frange front&back/customize the frange
Shaft: Length/Diameter/Cut face/double shaft/hollow shaft
Leadwire: PVC/Silicon/Teflon/UL No/Dimension/length
Connector: JST/MOLEX/TE

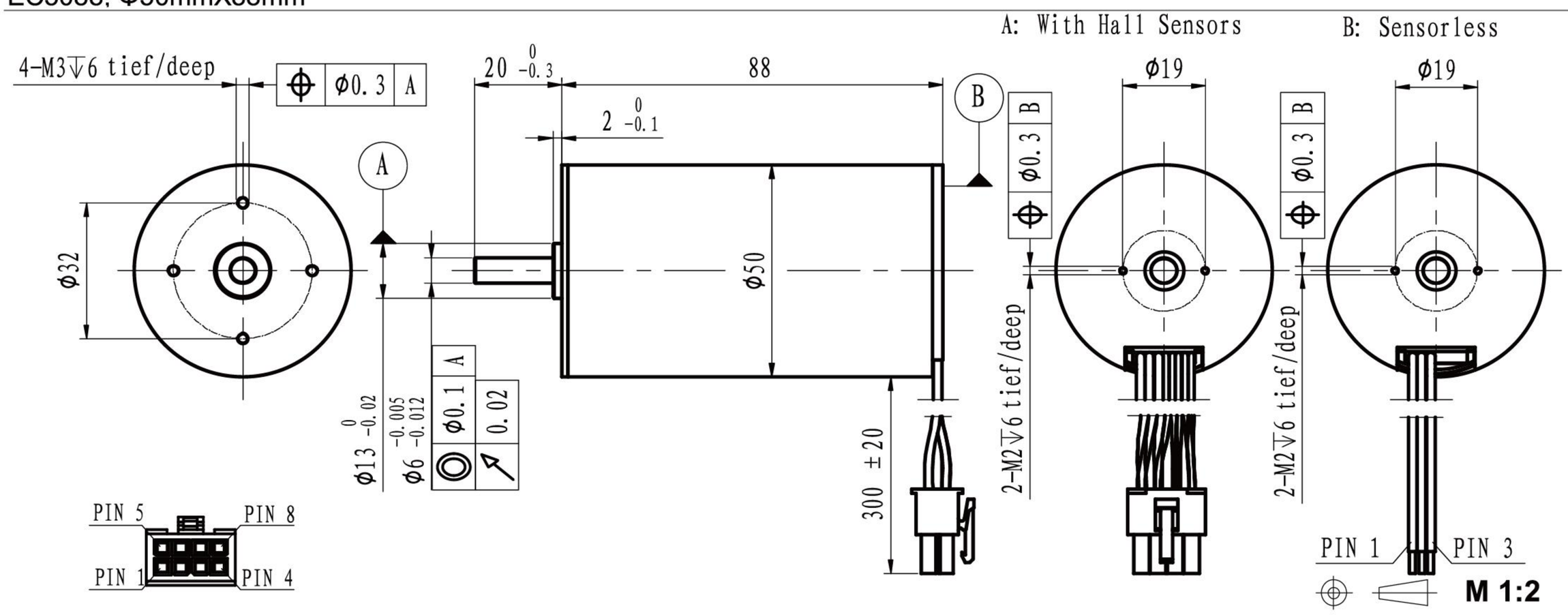

	Sensorless With hall sensor	EC5088L-… EC5088S-…	2408	3608	4808					
Motor data										
Values at nominal voltage										
1	Nominal voltage	V	24	36	48					
2	No load speed	rpm	8345	8175	8352					
3	No load current	mA	680	290	200					
4	Nominal speed	rpm	7845	7673	7844					
5	Nominal torque	mNm	280	280	280					
6	Nominal current	A	10.92	6.97	5.31					
7	Stall torque	mNm	4670.8	4563.1	4599.6					
8	Stall current	A	171.43	109.09	84.21					
9	Max. efficiency	%	87.8	90.0	90.5					
10	Terminal resistance	Ω	0.14	0.33	0.57					
11	Terminal inductance	mH	0.041	0.092	0.184					
12	Torque constant	mNm/A	27.35	41.94	54.75					
13	Speed constant	rpm/V	349	228	174					
14	Speed/torque gradient	rpm/mNm	2	2	2					
15	Mechanical time constant	ms	2.6	2.6	2.7					
16	Rotor inertia	gcm^2	140	140	140					

17	Thermal resistance housing-ambient	2.7 K/W
18	Thermal resistance winding-housing	1.1 K/W
19	Thermal time constant winding	48 s
20	Thermal time constant motor	1100 s
21	Ambient temprature	-30…+100℃
22	Max. permissible winding temperature	+125℃
23	Max. permissible speed	17500 rpm
24	Axial play at axial load <10N	0 mm
	>10N	max. 0.3 mm
25	Radial play	preloaded
26	Max. axial load (dynamic)	9 N
27	Max.force for press fits (static)	170 N
	(static, shaft supported)	4500 N
28	Max. radial loading, 5mm from flange	80 N
29	Number of pole pairs	1
30	Number of phases	3
31	Weight of motor	928 g

Operating Range

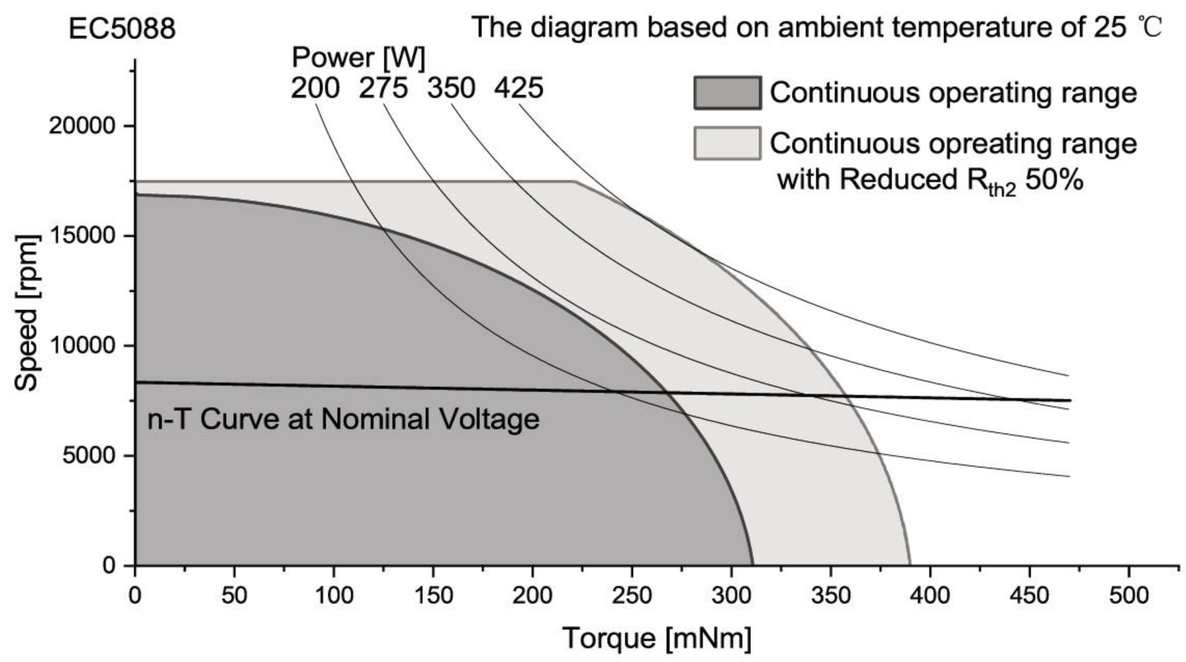

Connection

Conection A (Sensor) PTFE

Pin 1	Motor winding MB	AWG20	Green
Pin 2	Vhall 3-18 VDC	AWG26	Red
Pin 3	Hall sensor HA	AWG26	Yellow
Pin 4	Hall sensor HC	AWG26	Blue
Pin 5	Motor winding MA	AWG20	Yellow
Pin 6	Motor winding MC	AWG20	Blue
Pin 7	GND	AWG26	Black
Pin 8	Hall sensor HB	AWG26	Green

Conector
Molex5557-8P

Conection B (Sensorless) PTFE

Pin 1	Motor winding MA	AWG20	Yellow
Pin 2	Motor winding MB	AWG20	Green
Pin 3	Motor winding MC	AWG20	Blue

Configuration

Performance: Customized in the continuous operating range
Ball bearing: Preload
Flange: Standard frange front&back/customize the frange
Shaft: Length/Diameter/Cut face/double shaft/hollow shaft
Leadwire: PVC/Silicon/Teflon/UL No/Dimension/length
Connector: JST/MOLEX/TE

EC-4Pole Series

4 Pole winding technology

Model	Dimension (mm)	Nominal Troque (mNm)	Nominal Speed (rpm)	Page
EC4P2232	Φ22x32	13.5	15000	45
EC4P2250	Φ22x50	28	15000	46
EC4P2262	Φ22x62	55	10000	47
EC4P2899	Φ28x99	110	4000	48
EC4P3047	Φ30x47	48	11000	49
EC4P3064	Φ30x64	80	12000	50
EC4P3099	Φ30x99	130	6500	51

EC-4Pole Series

4 Pole winding technology

Thanks to the latest 4-Pole winding technology and 4-pole magnets,our 4-Pole series offers extremely high advantages in terms of volume and weight per unit power ratio.The cogging-free design ensures that torque fluctuations are minimized at low speed torque control.The stainless steel body design ensures adequate heat dissipation and excellent structural strength.

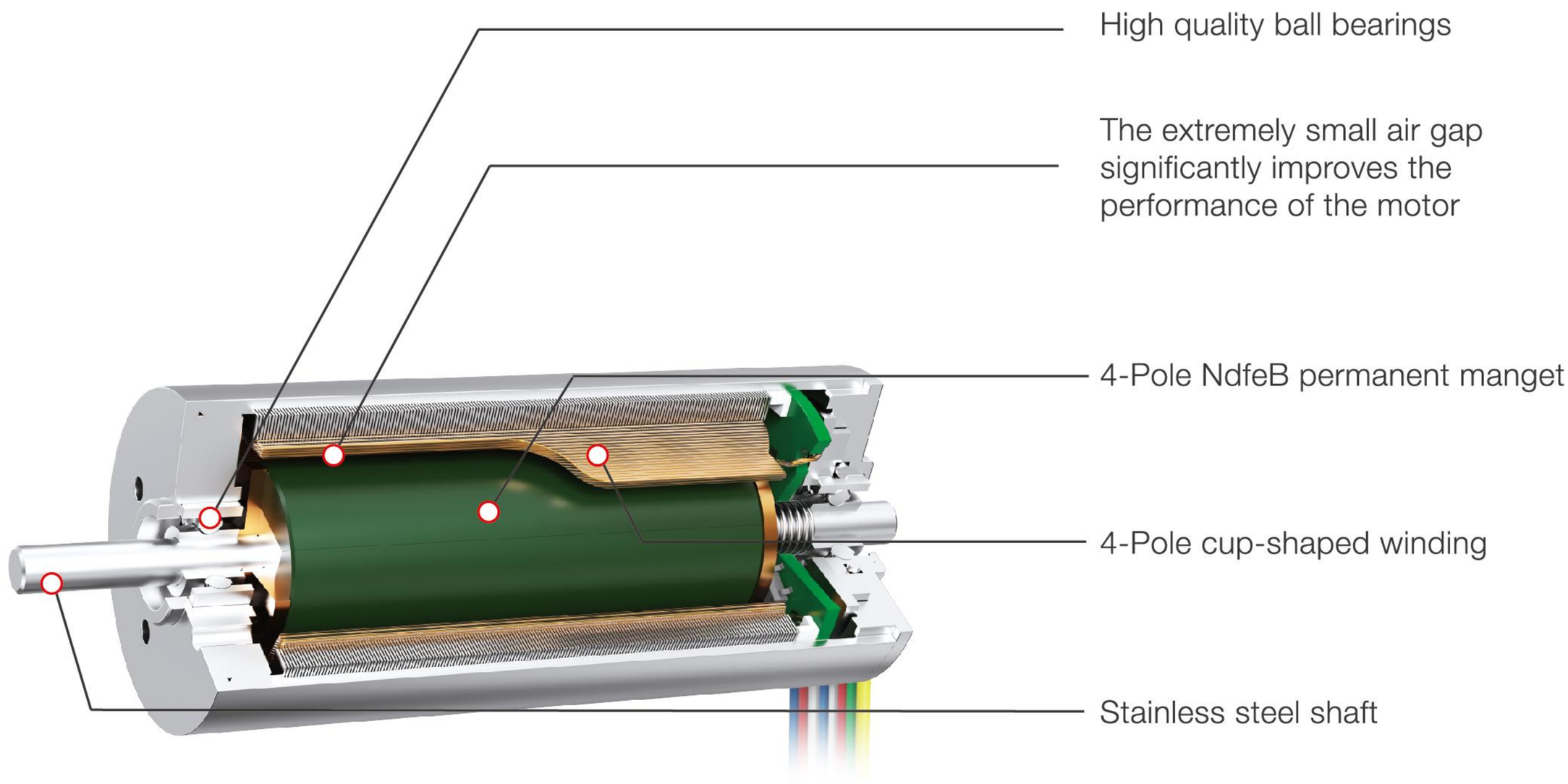

Basic Data:

Diameter: φ22mm-36mmm
Maximum Length: 99mm
Operate Voltage: 24V-48VDC
Maximum Power output:300W
Maximum Permissiblespeed: 25,000rpm
Operate temperature: -30°C-+80°C

Typical features:

Ultra high power density
Ultra High efficienty
High reliability
Low noise
No Cogging
Low inductance
Good heat dissipation
Long operational lifetime

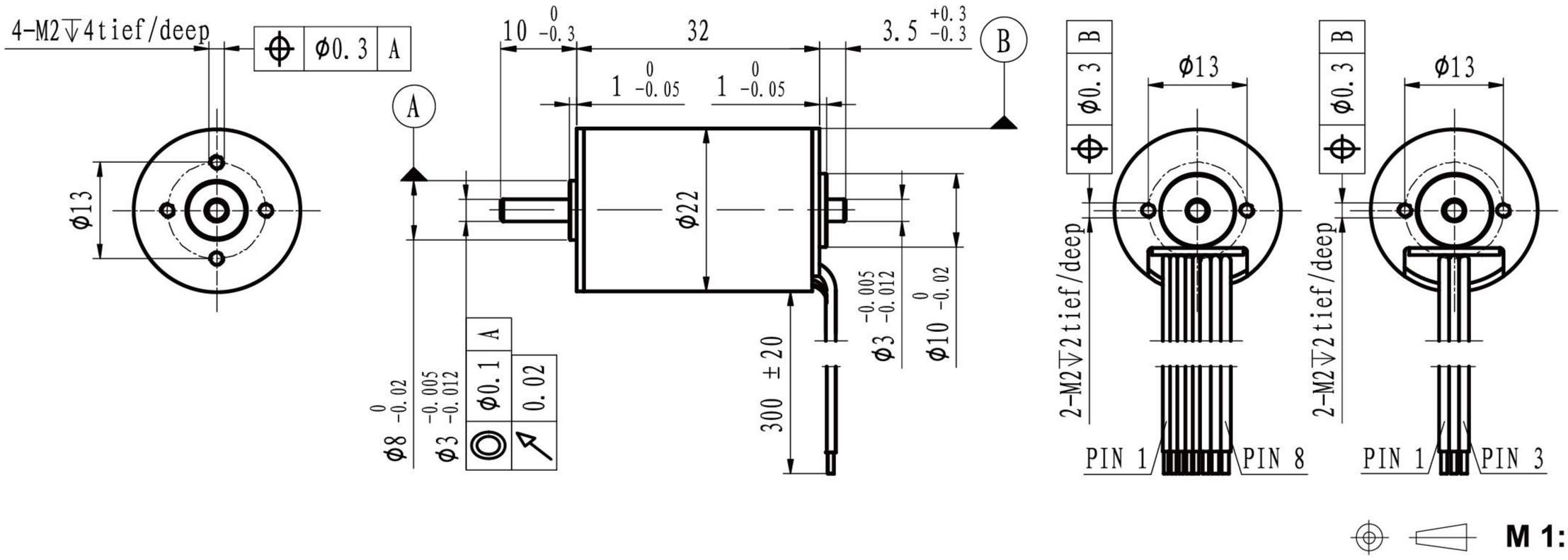

	Sensorless EC4P2232L-… / With hall sensor EC4P2232S-…	1216	2416	3616	4816
Motor data					
Values at nominal voltage					
1 Nominal voltage	V	12	24	36	48
2 No load speed	rpm	16302	16092	16210	16008
3 No load current	mA	210	120	72	60
4 Nominal speed	rpm	14812	15006	15095	14893
5 Nominal torque	mNm	13.5	13.5	13.5	13.5
6 Nominal current	A	2.15	1.08	0.71	0.54
7 Stall torque	mNm	147.7	200.1	196.3	193.8
8 Stall current	A	21.43	14.29	9.40	6.89
9 Max. efficiency	%	81.2	82.5	83.3	82.2
10 Terminal resistance	Ω	0.56	1.68	3.83	6.97
11 Terminal inductance	mH	0.03	0.11	0.25	0.48
12 Torque constant	mNm/A	6.96	14.12	21.05	28.38
13 Speed constant	rpm/V	1372	676	454	336
14 Speed/torque gradient	rpm/mNm	110	80	83	83
15 Mechanical time constant	ms	3.9	2.8	2.9	2.9
16 Rotor inertia	gcm^2	3.34	3.34	3.34	3.34

17 Thermal resistance housing-ambient		18.0 K/W
18 Thermal resistance winding-housing		7.8 K/W
19 Thermal time constant winding		17.6 s
20 Thermal time constant motor		735 s
21 Ambient temprature		-30…+100℃
22 Max. permissible winding temperature		+150℃
23 Max. permissible speed		25000 rpm
24 Axial play at axial load	<4 N	0 mm
	>4 N	max. 0.3 mm
25 Radial play		preloaded
26 Max. axial load (dynamic)		3.5 N
27 Max.force for press fits (static)		44 N
(static, shaft supported)		1200 N
28 Max. radial loading, 5mm from flange		15 N
29 Number of pole pairs		2
30 Number of phases		3
31 Weight of motor		77.2 g

Operating Range

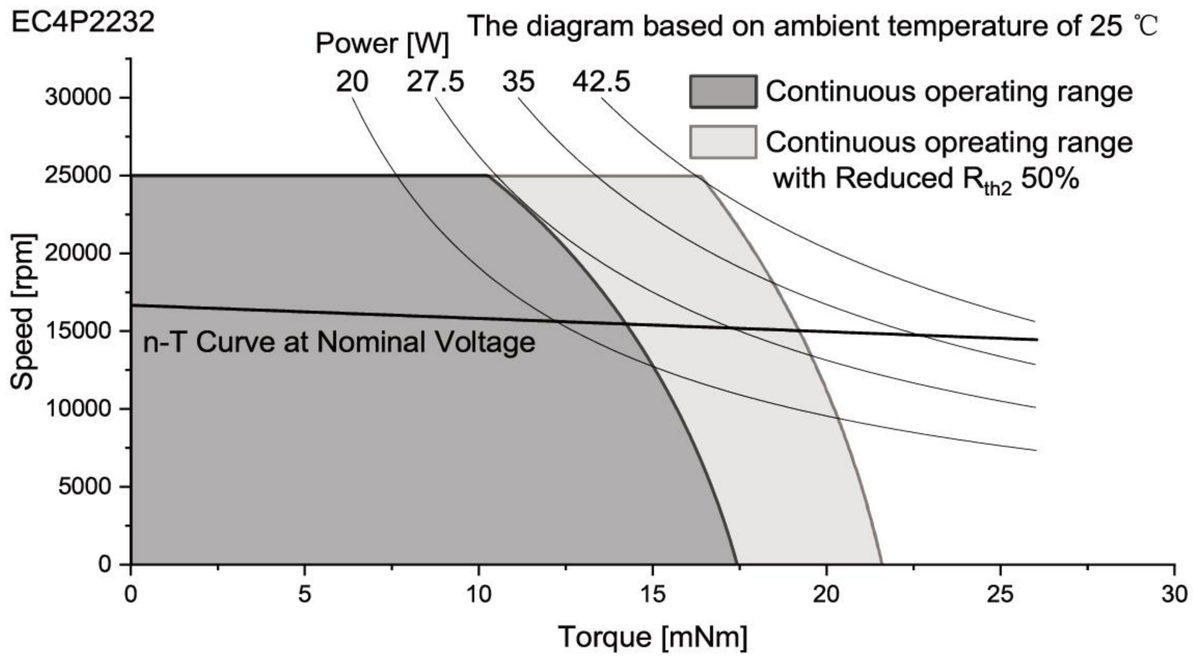

Connection

Conection A (Sensor) PTFE

Pin 1	Vhall 3-18 VDC	AWG26	Red
Pin 2	Hall sensor HA	AWG26	Yellow
Pin 3	Hall sensor HB	AWG26	Blue
Pin 4	Hall sensor HC	AWG26	Green
Pin 5	GND	AWG26	black
Pin 6	Motor winding MA	AWG20	Yellow
Pin 7	Motor winding MB	AWG20	Blue
Pin 8	Motor winding MC	AWG20	Green

Conection B (Sensorless) PTFE

Pin 1	Motor winding MA	AWG20	yellow
Pin 2	Motor winding MB	AWG20	green
Pin 3	Motor winding MC	AWG20	blue

Configuration

Performance: Customized in the continuous operating range
Ball bearing: Preload
Flange: Standard frange front&back/customize the frange
Shaft: Length/Diameter/Cut face/double shaft/hollow shaft
Leadwire: PVC/Silicon/Teflon/UL No/Dimension/length
Connector: JST/MOLEX/TE

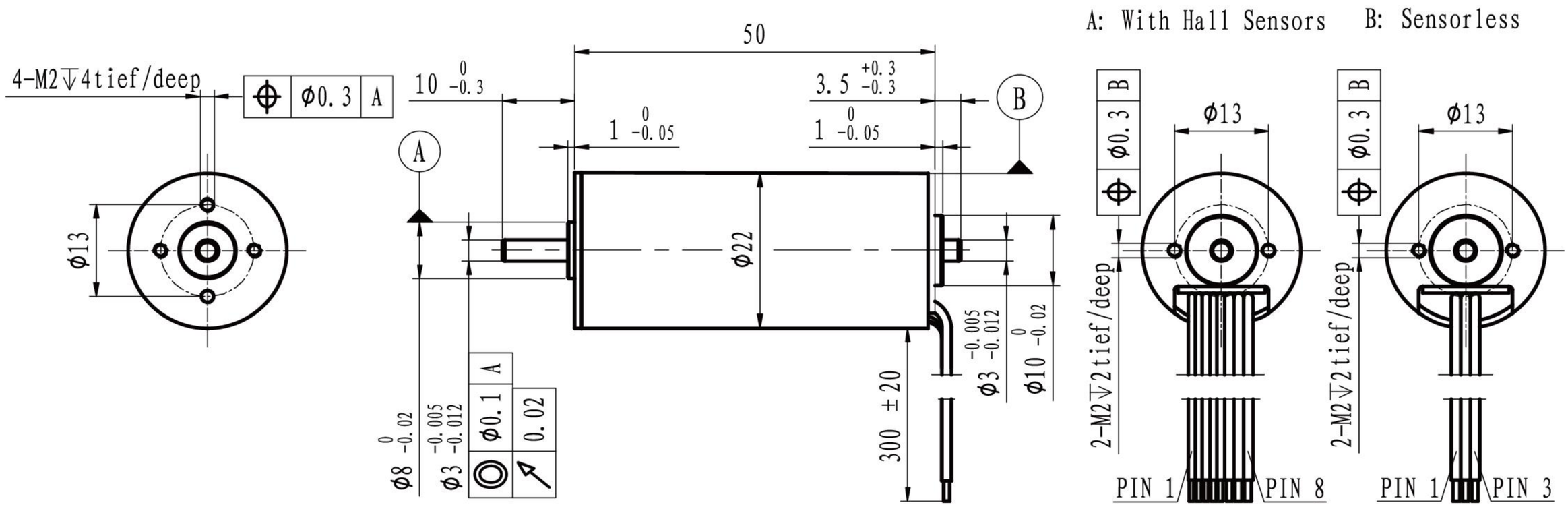

M 1:1.2

	Sensorless EC4P2250L-… / With hall sensor EC4P2250S-…		2416	3616	4816					
Motor data										
Values at nominal voltage										
1	Nominal voltage	V	24	36	48					
2	No load speed	rpm	16240	16133	16311					
3	No load current	mA	250	170	110					
4	Nominal speed	rpm	15493	15279	15621					
5	Nominal torque	mNm	28	28	28					
6	Nominal current	A	2.25	1.49	1.11					
7	Stall torque	mNm	608.8	529.2	661.6					
8	Stall current	A	43.64	25.17	23.76					
9	Max. efficiency	%	85.4	84.2	86.9					
10	Terminal resistance	Ω	0.55	1.43	2.02					
11	Terminal inductance	mH	0.05	0.12	0.19					
12	Torque constant	mNm/A	14.03	21.16	27.97					
13	Speed constant	rpm/V	681	451	341					
14	Speed/torque gradient	rpm/mNm	27	30	25					
15	Mechanical time constant	ms	1.7	1.9	1.5					
16	Rotor inertia	gcm^2	5.98	5.98	5.98					

17	Thermal resistance housing-ambient	12.7 K/W
18	Thermal resistance winding-housing	3.5 K/W
19	Thermal time constant winding	8 s
20	Thermal time constant motor	780 s
21	Ambient temprature	-30…+100℃
22	Max. permissible winding temperature	+150℃
23	Max. permissible speed	25000 rpm
24	Axial play at axial load <4 N	0 mm
	>4 N	max. 0.3 mm
25	Radial play	preloaded
26	Max. axial load (dynamic)	3.5 N
27	Max.force for press fits (static)	44 N
	(static, shaft supported)	1200 N
28	Max. radial loading, 5mm from flange	15 N
29	Number of pole pairs	2
30	Number of phases	3
31	Weight of motor	119 g

Operating Range

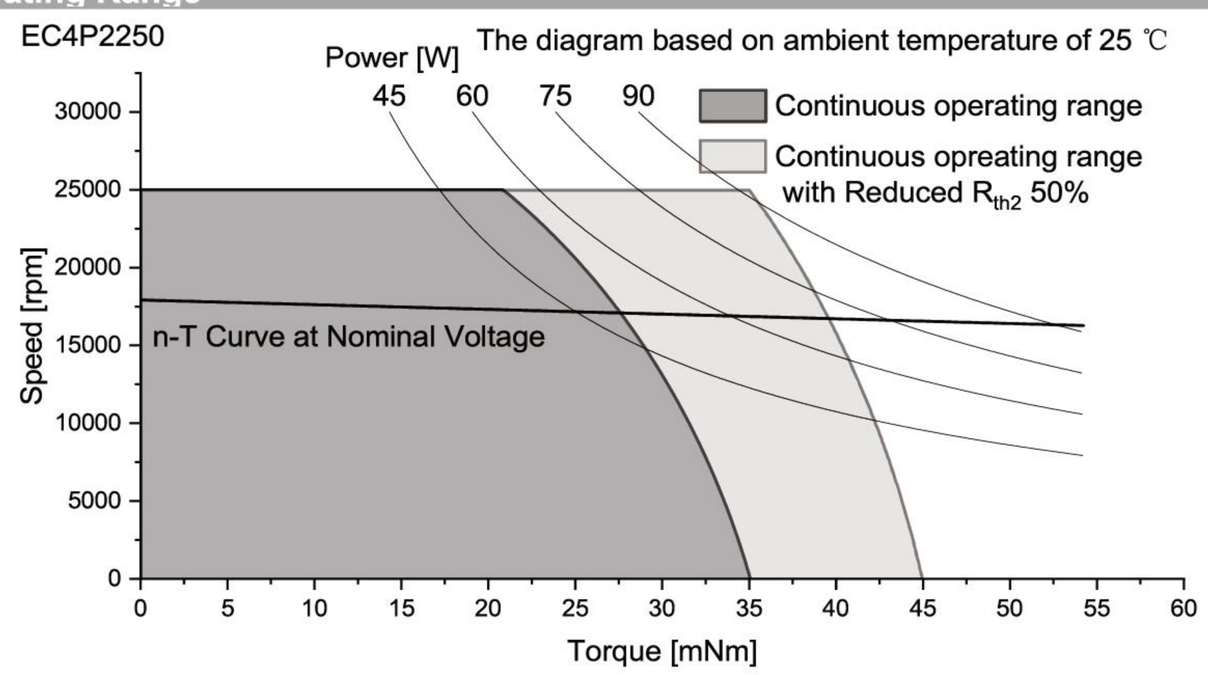

Connection

Conection A (Sensor) PTFE

Pin 1	Vhall 3-18 VDC	AWG26	Red
Pin 2	Hall sensor HA	AWG26	Yellow
Pin 3	Hall sensor HB	AWG26	Blue
Pin 4	Hall sensor HC	AWG26	Green
Pin 5	GND	AWG26	black
Pin 6	Motor winding MA	AWG20	Yellow
Pin 7	Motor winding MB	AWG20	Blue
Pin 8	Motor winding MC	AWG20	Green

Conection B (Sensorless) PTFE

Pin 1	Motor winding MA	AWG20	yellow
Pin 2	Motor winding MB	AWG20	green
Pin 3	Motor winding MC	AWG20	blue

Configuration

Performance: Customized in the continuous operating range
Ball bearing: Preload
Flange: Standard frange front&back/customize the frange
Shaft: Length/Diameter/Cut face/double shaft/hollow shaft
Leadwire: PVC/Silicon/Teflon/UL No/Dimension/length
Connector: JST/MOLEX/TE

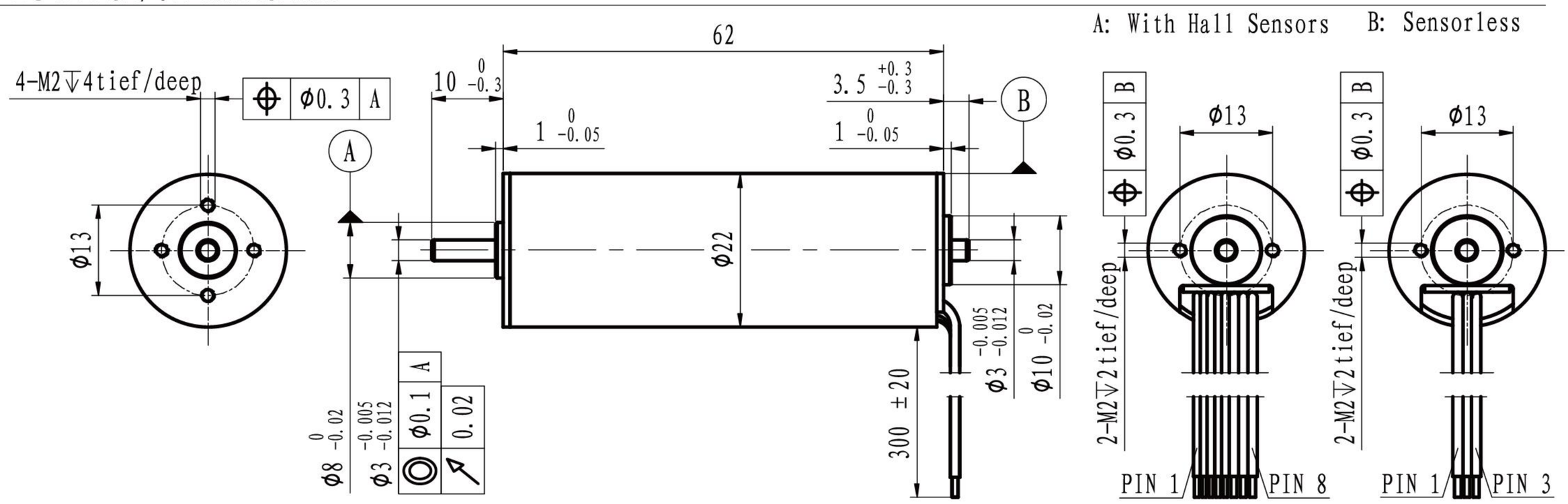

M 1:1.5

	Sensorless With hall sensor	EC4P2262L-… EC4P2262S-…	2412	3612	4812					
Motor data										
Values at nominal voltage										
1	Nominal voltage	V	24	36	48					
2	No load speed	rpm	11705	12100	11795					
3	No load current	mA	180	135	80					
4	Nominal speed	rpm	10834	11299	10971					
5	Nominal torque	mNm	55	55	55					
6	Nominal current	A	3.00	2.08	1.50					
7	Stall torque	mNm	738.9	830.7	787.6					
8	Stall current	A	38.10	29.51	20.43					
9	Max. efficiency	%	86.7	86.9	87.9					
10	Terminal resistance	Ω	0.63	1.22	2.35					
11	Terminal inductance	mH	0.06	0.12	0.24					
12	Torque constant	mNm/A	19.49	28.28	38.71					
13	Speed constant	rpm/V	490	338	247					
14	Speed/torque gradient	rpm/mNm	16	15	15					
15	Mechanical time constant	ms	1.4	1.3	1.3					
16	Rotor inertia	gcm^2	8.43	8.43	8.43					

17	Thermal resistance housing-ambient	7.8 K/W
18	Thermal resistance winding-housing	2.8 K/W
19	Thermal time constant winding	17 s
20	Thermal time constant motor	612 s
21	Ambient temprature	-30…+100℃
22	Max. permissible winding temperature	+150℃
23	Max. permissible speed	25000 rpm
24	Axial play at axial load <4 N	0 mm
	>4 N	max. 0.3 mm
25	Radial play	preloaded
26	Max. axial load (dynamic)	3.5 N
27	Max.force for press fits (static)	44 N
	(static, shaft supported)	1200 N
28	Max. radial loading, 5mm from flange	15 N
29	Number of pole pairs	2
30	Number of phases	3
31	Weight of motor	151 g

Operating Range

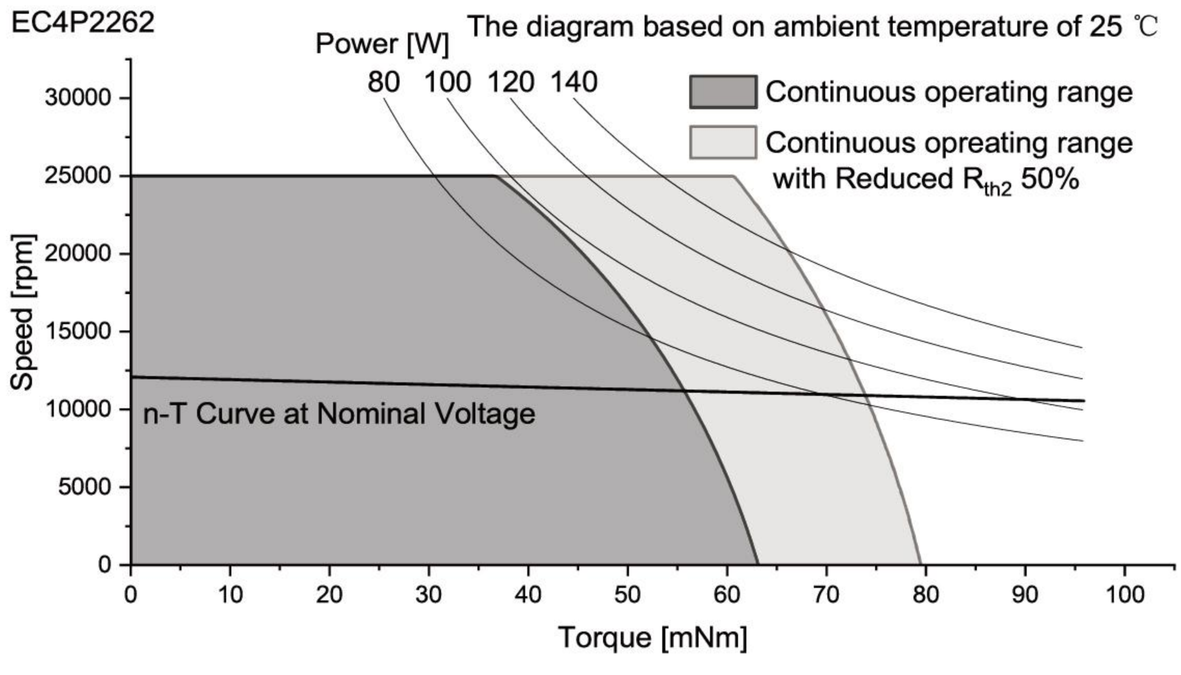

Connection

Conection A (Sensor) PTFE

Pin 1	Vhall 3-18 VDC	AWG26	Red
Pin 2	Hall sensor HA	AWG26	Yellow
Pin 3	Hall sensor HB	AWG26	Blue
Pin 4	Hall sensor HC	AWG26	Green
Pin 5	GND	AWG26	black
Pin 6	Motor winding MA	AWG20	Yellow
Pin 7	Motor winding MB	AWG20	Blue
Pin 8	Motor winding MC	AWG20	Green

Conection B (Sensorless) PTFE

Pin 1	Motor winding MA	AWG20	yellow
Pin 2	Motor winding MB	AWG20	green
Pin 3	Motor winding MC	AWG20	blue

Configuration

Performance: Customized in the continuous operating range
Ball bearing: Preload
Flange: Standard frange front&back/customize the frange
Shaft: Length/Diameter/Cut face/double shaft/hollow shaft
Leadwire: PVC/Silicon/Teflon/UL No/Dimension/length
Connector: JST/MOLEX/TE

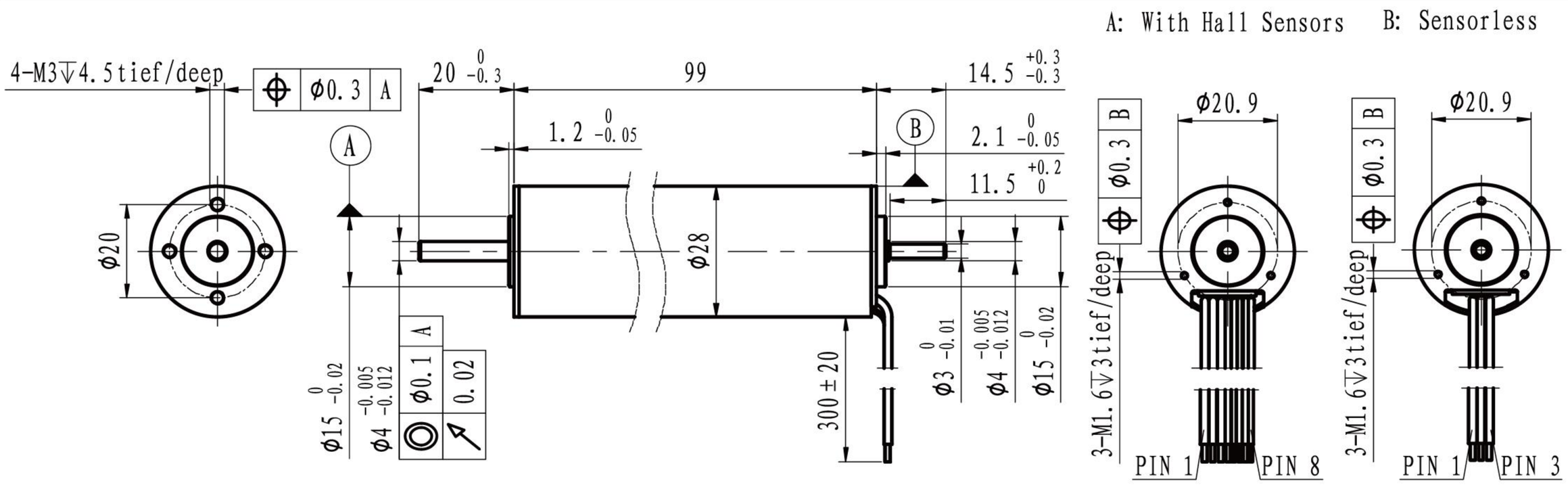

M 1:1.8

	Sensorless / With hall sensor	EC4P2899L-… / EC4P2899S-…	2404	3604	4804
Motor data					
Values at nominal voltage					
1	Nominal voltage	V	24	36	48
2	No load speed	rpm	4589	4533	4501
3	No load current	mA	150	110	70
4	Nominal speed	rpm	4111	4051	4027
5	Nominal torque	mNm	110	110	110
6	Nominal current	A	2.37	1.57	1.16
7	Stall torque	mNm	1055.3	1033.4	1043.8
8	Stall current	A	21.43	13.85	10.39
9	Max. efficiency	%	84.0	83.0	84.3
10	Terminal resistance	Ω	1.12	2.6	4.62
11	Terminal inductance	mH	0.15	0.34	0.6
12	Torque constant	mNm/A	49.59	75.24	101.15
13	Speed constant	rpm/V	193	127	94
14	Speed/torque gradient	rpm/mNm	4	4	4
15	Mechanical time constant	ms	1.4	1.4	1.4
16	Rotor inertia	gcm^2	30.1	30.1	30.1

17	Thermal resistance housing-ambient	6.6 K/W
18	Thermal resistance winding-housing	2.5 K/W
19	Thermal time constant winding	33 s
20	Thermal time constant motor	1370 s
21	Ambient temprature	-30…+100℃
22	Max. permissible winding temperature	+150℃
23	Max. permissible speed	12000 rpm
24	Axial play at axial load <8 N	0 mm
	>8 N	max. 0.3 mm
25	Radial play	preloaded
26	Max. axial load (dynamic)	7.5 N
27	Max.force for press fits (static)	100 N
	(static, shaft supported)	2000 N
28	Max. radial loading, 5mm from flange	25 N
29	Number of pole pairs	1
30	Number of phases	3
31	Weight of motor	389 g

Operating Range

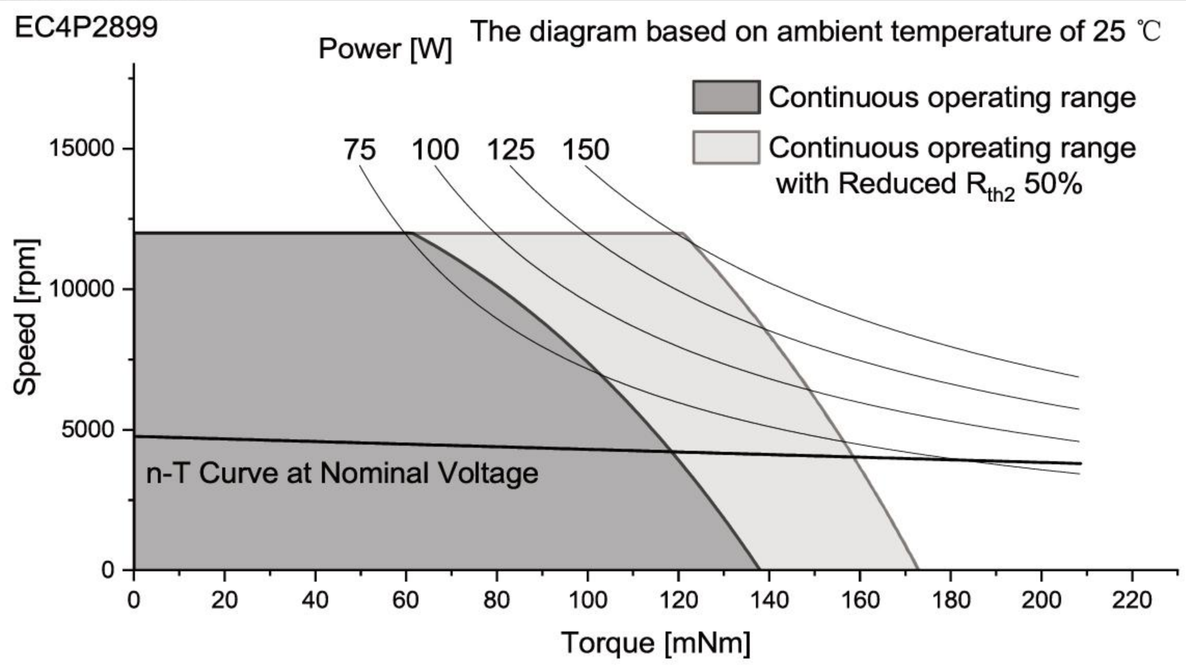

Connection

Conection A (Sensor) PTFE

Pin 1	Motor winding MA	AWG20	yellow
Pin 2	Motor winding MB	AWG20	green
Pin 3	Motor winding MC	AWG20	blue
Pin 4	Vhall 3-18 VDC	AWG26	red
Pin 5	GND	AWG26	black
Pin 6	Hall sensor HA	AWG26	white
Pin 7	Hall sensor HB	AWG26	orange
Pin 8	Hall sensor HC	AWG26	gray

Conection B (Sensorless) PVC

Pin 1	Motor winding MA	AWG20	yellow
Pin 2	Motor winding MB	AWG20	green
Pin 3	Motor winding MC	AWG20	blue

Configuration

Performance: Customized in the continuous operating range
Ball bearing: Preload
Flange: Standard frange front&back/customize the frange
Shaft: Length/Diameter/Cut face/double shaft/hollow shaft
Leadwire: PVC/Silicon/Teflon/UL No/Dimension/length
Connector: JST/MOLEX/TE

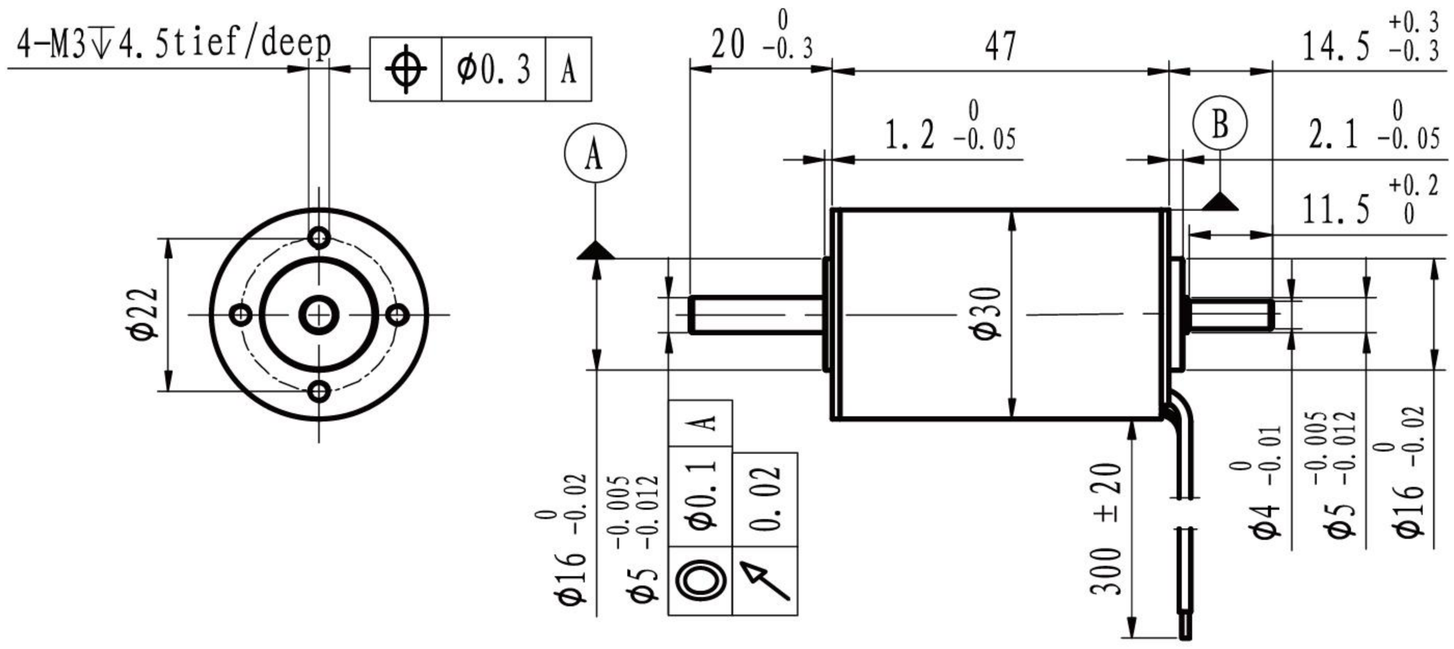

A: With Hall Sensors

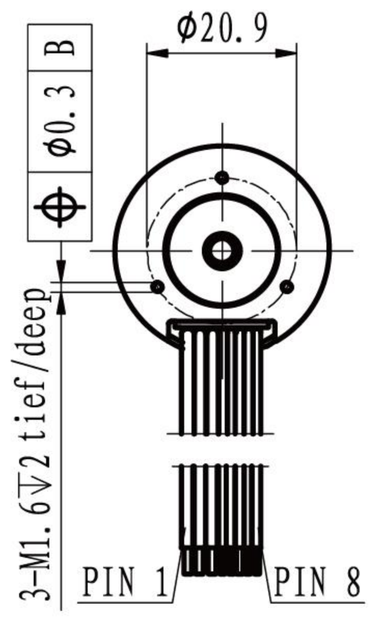

B: Sensorless

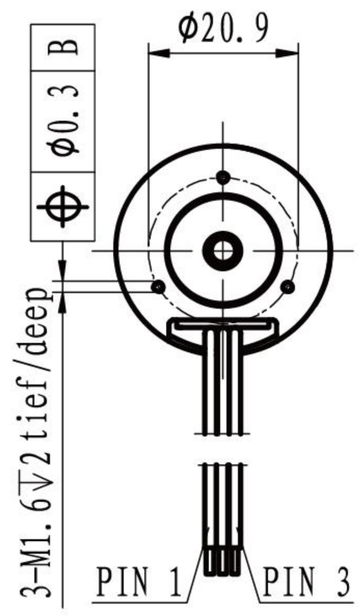

M 1:1.8

	Sensorless With hall sensor	EC4P3047L-… EC4P3047S-…	2412	3612	4812					
Motor data										
Values at nominal voltage										
1	Nominal voltage	V	24	36	48					
2	No load speed	rpm	11890	12600	12338					
3	No load current	mA	330	249	170					
4	Nominal speed	rpm	11239	11868	11661					
5	Nominal torque	mNm	48	48	48					
6	Nominal current	A	2.84	2.02	1.47					
7	Stall torque	mNm	876.95	825.97	874.60					
8	Stall current	A	46.15	30.77	23.88					
9	Max. efficiency	%	83.8	82.8	83.8					
10	Terminal resistance	Ω	0.52	1.17	2.01					
11	Terminal inductance	mH	0.056	0.098	0.23					
12	Torque constant	mNm/A	19.14	27.06	36.89					
13	Speed constant	rpm/V	499	353	259					
14	Speed/torque gradient	rpm/mNm	14	15	14					
15	Mechanical time constant	ms	3.1	3.5	3.2					
16	Rotor inertia	gcm^2	21.9	21.9	21.9					

17	Thermal resistance housing-ambient		9.5 K/W
18	Thermal resistance winding-housing		2.8 K/W
19	Thermal time constant winding		17 s
20	Thermal time constant motor		903 s
21	Ambient temprature		-30…+100℃
22	Max. permissible winding temperature		+150℃
23	Max. permissible speed		20000 rpm
24	Axial play at axial load	<8 N	0 mm
		>8 N	max. 0.3 mm
25	Radial play		preloaded
26	Max. axial load (dynamic)		7.5 N
27	Max.force for press fits (static)		100 N
	(static, shaft supported)		2700 N
28	Max. radial loading, 5mm from flange		25 N
29	Number of pole pairs		2
30	Number of phases		3
31	Weight of motor		207 g

Operating Range

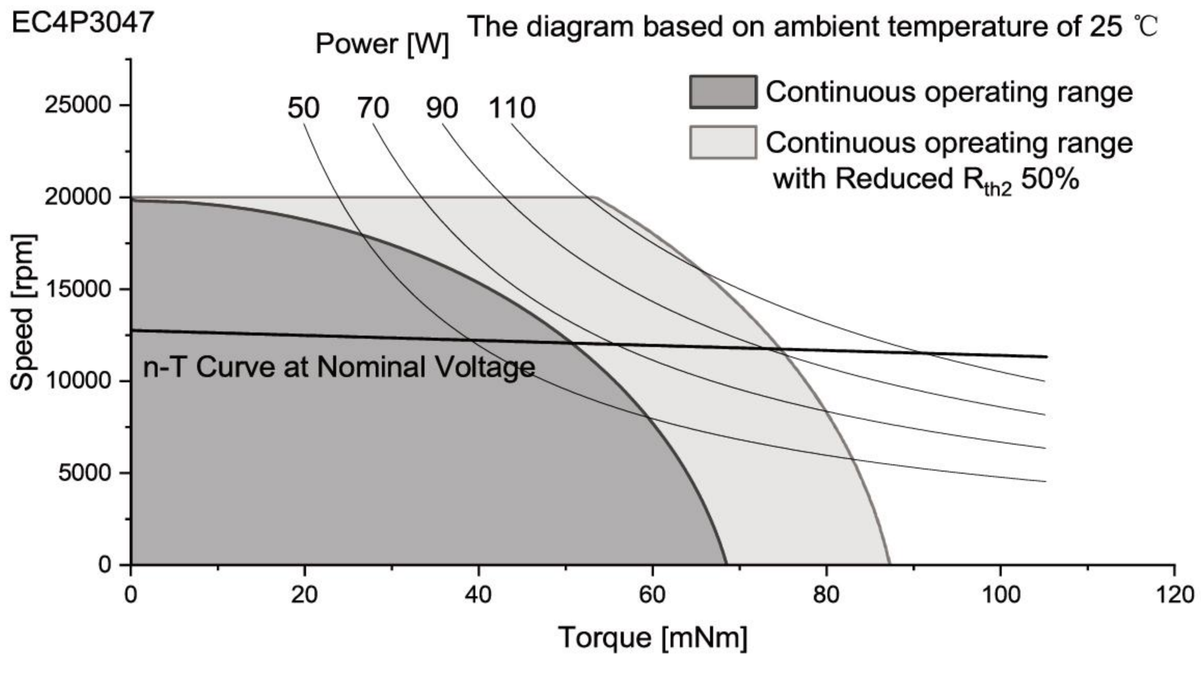

Connection

Conection A (Sensor) PTFE

Pin 1	Motor winding MA	AWG20	yellow
Pin 2	Motor winding MB	AWG20	green
Pin 3	Motor winding MC	AWG20	blue
Pin 4	Vhall 3-18 VDC	AWG26	red
Pin 5	GND	AWG26	black
Pin 6	Hall sensor HA	AWG26	white
Pin 7	Hall sensor HB	AWG26	orange
Pin 8	Hall sensor HC	AWG26	gray

Conection B (Sensorless) PVC

Pin 1	Motor winding MA	AWG20	yellow
Pin 2	Motor winding MB	AWG20	green
Pin 3	Motor winding MC	AWG20	blue

Configuration

Performance: Customized in the continuous operating range
Ball bearing: Preload
Flange: Standard frange front&back/customize the frange
Shaft: Length/Diameter/Cut face/double shaft/hollow shaft
Leadwire: PVC/Silicon/Teflon/UL No/Dimension/length
Connector: JST/MOLEX/TE

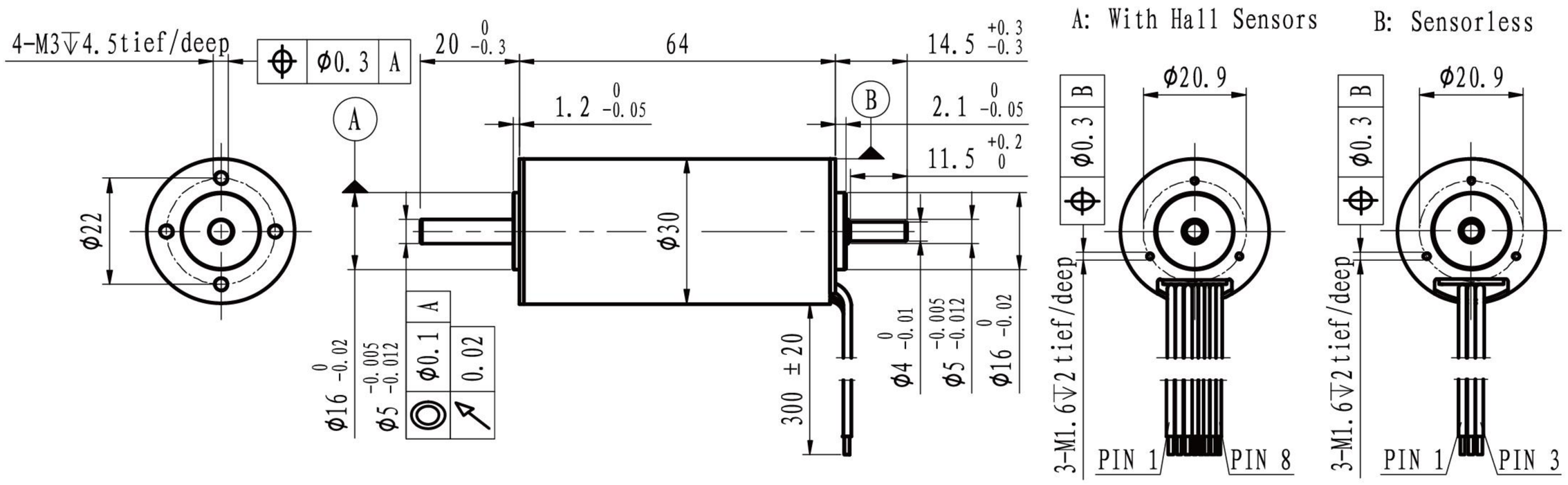

M 1:1.8

	Sensorless With hall sensor	EC4P3064L-… EC4P3064S-…	2412	3612	4812					
Motor data										
Values at nominal voltage										
1	Nominal voltage	V	24	36	48					
2	No load speed	rpm	12119	12376	12413					
3	No load current	mA	520	280	210					
4	Nominal speed	rpm	11716	11984	12032					
5	Nominal torque	mNm	80	80	80					
6	Nominal current	A	4.77	3.17	2.38					
7	Stall torque	mNm	2407.46	2522.52	2606.50					
8	Stall current	A	128.34	91.37	71.01					
9	Max. efficiency	%	87.7	89.2	89.4					
10	Terminal resistance	Ω	0.19	0.39	0.68					
11	Terminal inductance	mH	0.026	0.061	0.101					
12	Torque constant	mNm/A	18.83	27.69	36.82					
13	Speed constant	rpm/V	507	345	259					
14	Speed/torque gradient	rpm/mNm	5	5	5					
15	Mechanical time constant	ms	1.8	1.7	1.7					
16	Rotor inertia	gcm^2	33.8	33.8	33.8					

17	Thermal resistance housing-ambient	7.5 K/W
18	Thermal resistance winding-housing	2.1 K/W
19	Thermal time constant winding	26 s
20	Thermal time constant motor	1100 s
21	Ambient temprature	-30…+100℃
22	Max. permissible winding temperature	+150℃
23	Max. permissible speed	20000 rpm
24	Axial play at axial load <8 N	0 mm
	>8 N	max. 0.3 mm
25	Radial play	preloaded
26	Max. axial load (dynamic)	7.5 N
27	Max.force for press fits (static)	100 N
	(static, shaft supported)	2700 N
28	Max. radial loading, 5mm from flange	25 N
29	Number of pole pairs	2
30	Number of phases	3
31	Weight of motor	286 g

Operating Range

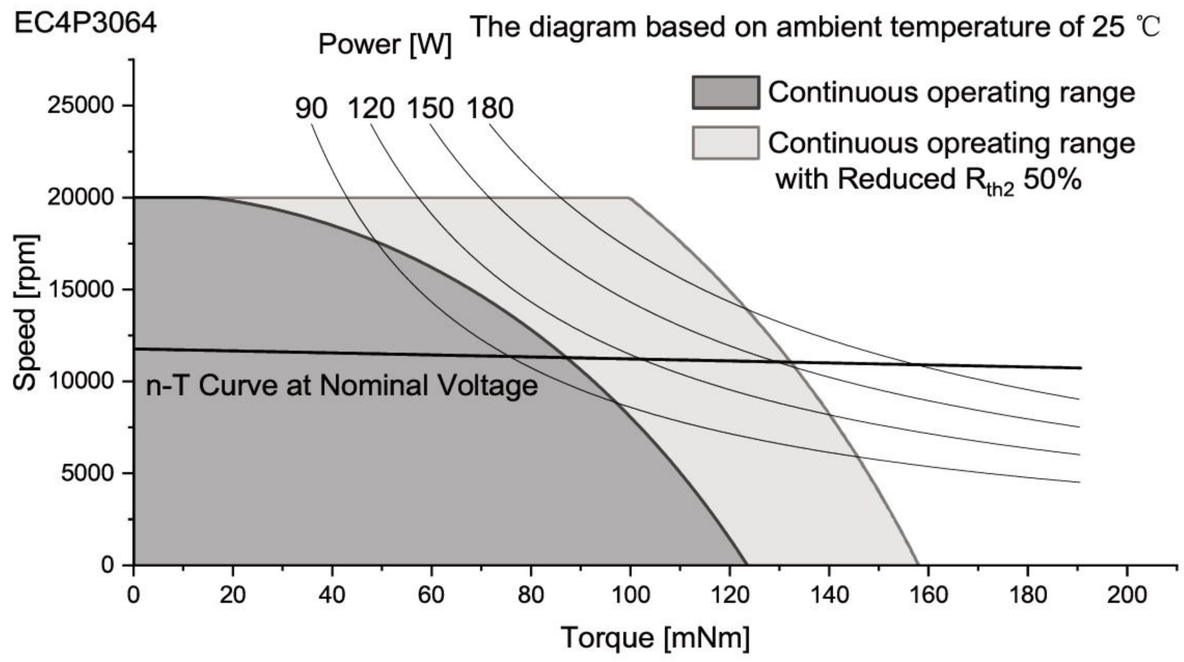

Connection

Conection A (Sensor) PTFE

Pin 1	Motor winding MA	AWG20	yellow
Pin 2	Motor winding MB	AWG20	green
Pin 3	Motor winding MC	AWG20	blue
Pin 4	Vhall 3-18 VDC	AWG26	red
Pin 5	GND	AWG26	black
Pin 6	Hall sensor HA	AWG26	white
Pin 7	Hall sensor HB	AWG26	orange
Pin 8	Hall sensor HC	AWG26	gray

Conection B (Sensorless) PVC

Pin 1	Motor winding MA	AWG20	yellow
Pin 2	Motor winding MB	AWG20	green
Pin 3	Motor winding MC	AWG20	blue

Configuration

Performance: Customized in the continuous operating range
Ball bearing: Preload
Flange: Standard frange front&back/customize the frange
Shaft: Length/Diameter/Cut face/double shaft/hollow shaft
Leadwire: PVC/Silicon/Teflon/UL No/Dimension/length
Connector: JST/MOLEX/TE

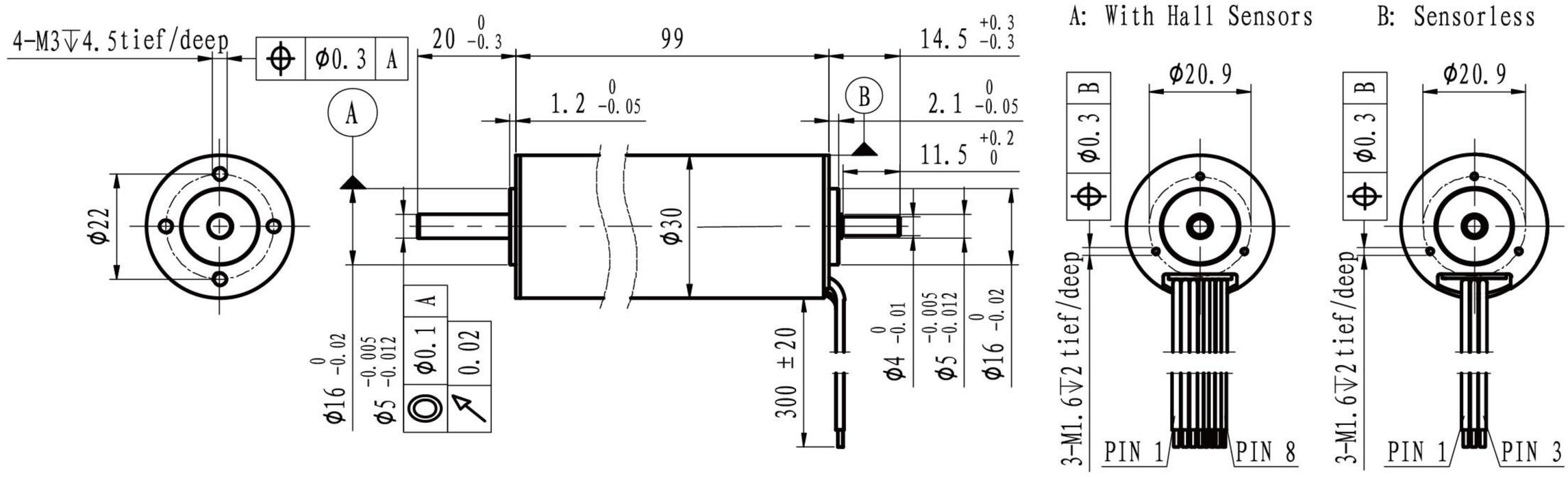

M 1:1.8

	Sensorless EC4P3099L-… / With hall sensor EC4P3099S-…		2407	3607	4807					
Motor data										
Values at nominal voltage										
1	Nominal voltage	V	24	36	48					
2	No load speed	rpm	6812	6983	7064					
3	No load current	mA	330	240	140					
4	Nominal speed	rpm	6458	6600	6690					
5	Nominal torque	mNm	130	130	130					
6	Nominal current	A	4.21	2.89	2.15					
7	Stall torque	mNm	2501.15	2371.41	2453.77					
8	Stall current	A	75.00	48.65	38.10					
9	Max. efficiency	%	87.2	86.4	88.2					
10	Terminal resistance	Ω	0.32	0.74	1.26					
11	Terminal inductance	mH	0.048	0.113	0.182					
12	Torque constant	mNm/A	33.50	48.99	64.65					
13	Speed constant	rpm/V	285	195	148					
14	Speed/torque gradient	rpm/mNm	3	3	3					
15	Mechanical time constant	ms	1.6	1.7	1.7					
16	Rotor inertia	gcm^2	54.8	54.8	54.8					

17	Thermal resistance housing-ambient	5.6 K/W
18	Thermal resistance winding-housing	2.7 K/W
19	Thermal time constant winding	42 s
20	Thermal time constant motor	1275 s
21	Ambient temprature	-30…+100℃
22	Max. permissible winding temperature	+150℃
23	Max. permissible speed	20000 rpm
24	Axial play at axial load <8 N	0 mm
	>8 N	max. 0.3 mm
25	Radial play	preloaded
26	Max. axial load (dynamic)	7.5 N
27	Max.force for press fits (static)	100 N
	(static, shaft supported)	2700 N
28	Max. radial loading, 5mm from flange	25 N
29	Number of pole pairs	2
30	Number of phases	3
31	Weight of motor	432 g

Operating Range

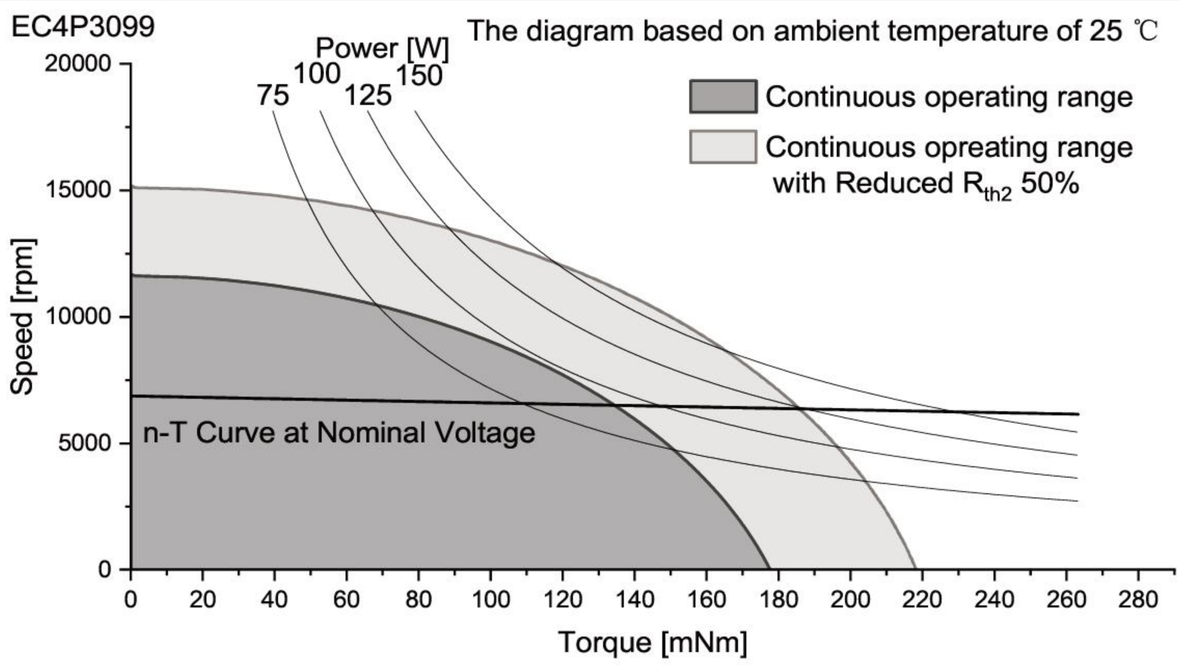

Connection

Conection A (Sensor) PTFE

Pin 1	Motor winding MA	AWG20	yellow
Pin 2	Motor winding MB	AWG20	green
Pin 3	Motor winding MC	AWG20	blue
Pin 4	Vhall 3-18 VDC	AWG26	red
Pin 5	GND	AWG26	black
Pin 6	Hall sensor HA	AWG26	white
Pin 7	Hall sensor HB	AWG26	orange
Pin 8	Hall sensor HC	AWG26	gray

Conection B (Sensorless) PVC

Pin 1	Motor winding MA	AWG20	yellow
Pin 2	Motor winding MB	AWG20	green
Pin 3	Motor winding MC	AWG20	blue

Configuration

Performance: Customized in the continuous operating range
Ball bearing: Preload
Flange: Standard frange front&back/customize the frange
Shaft: Length/Diameter/Cut face/double shaft/hollow shaft
Leadwire: PVC/Silicon/Teflon/UL No/Dimension/length
Connector: JST/MOLEX/TE

Subject: _____

Date: _____

ECD Series

Electronics integrated

Model	Dimension (mm)	Nominal Troque (mNm)	Nominal Speed (rpm)	Page
ECD1228	Φ12x28	0.5	25000	56
ECD1629	Φ16x29	2	10000	57
ECD1638	Φ16x38	1.5	15000	58
ECD2238	Φ22x38	6	15000	59
ECD2246	Φ22x46	8	12000	60
ECD2452	Φ24.5x52	14	6000	61
ECD2459	Φ24.5x59	20	6000	62
ECD2854	Φ28x54	18	5000	63
ECD2863	Φ28x63	25	3000	64
ECD3270	Φ32x70	40	6000	65
ECD3673	Φ36x73	50	3000	66
ECD3683	Φ36x33	75	3000	67

ECD Series

Electronics integrated

We creatively integrate the brushless motor drive system into the motor and can provide functional customization,the minimum outer diameter can be 12mm,especially suitable for space-limited speed control occasions,users do not need to consider additional motor control,bringing the most convenient use.

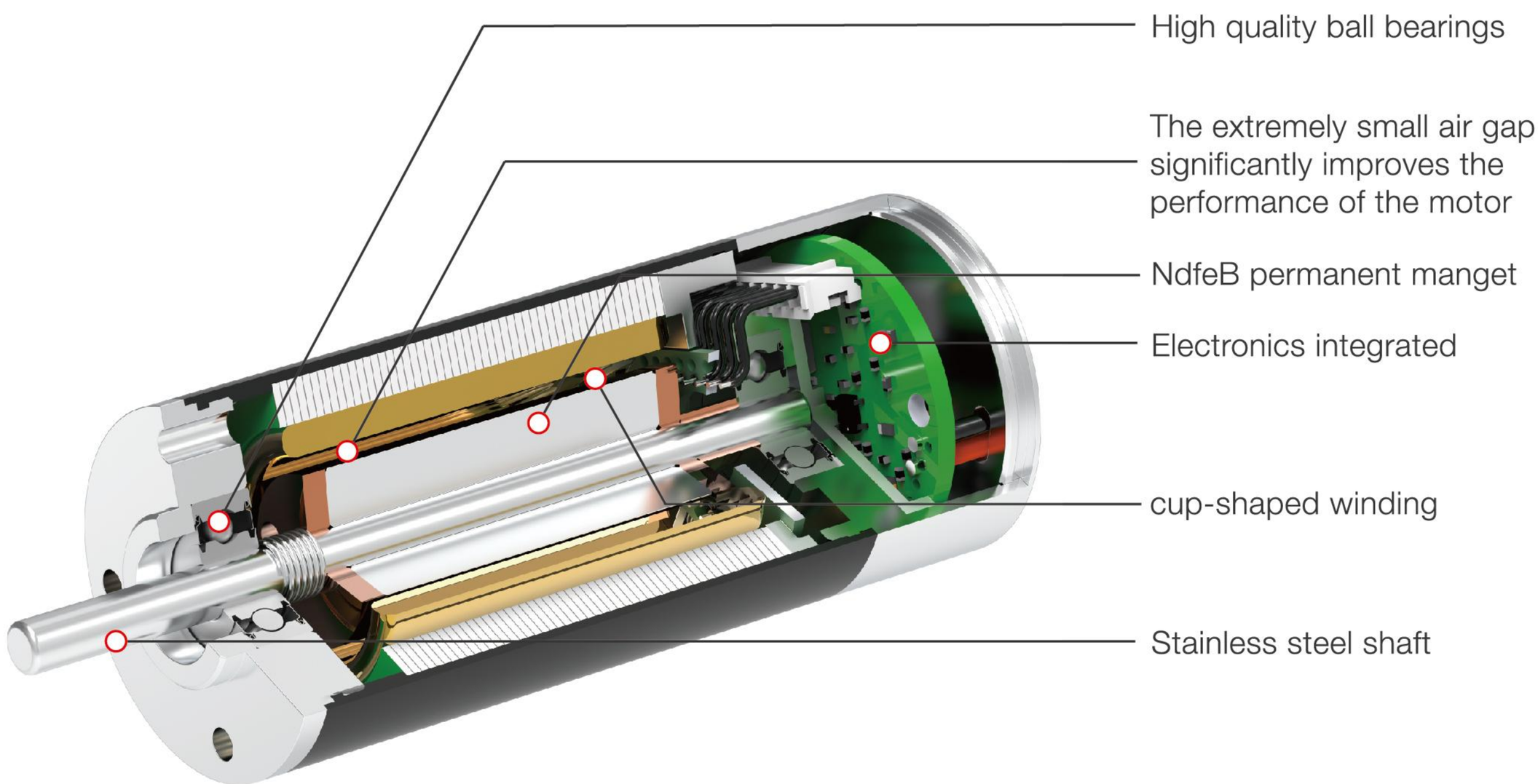

Basic Data:
Diameter: φ12mm-36mmm
Maximum Continuous current: 3A
Operate Voltage: 4.5V-26VDC
Maximum Power output:50W
Maximum Permissiblespeed: 30,000rpm
Operate temperature: -30°C-+80°C

Typical features:
Electronics integrated
High power density
High efficienty
Low noise
Low inductance
Good heat dissipation

I/O Schematics

Speed command input

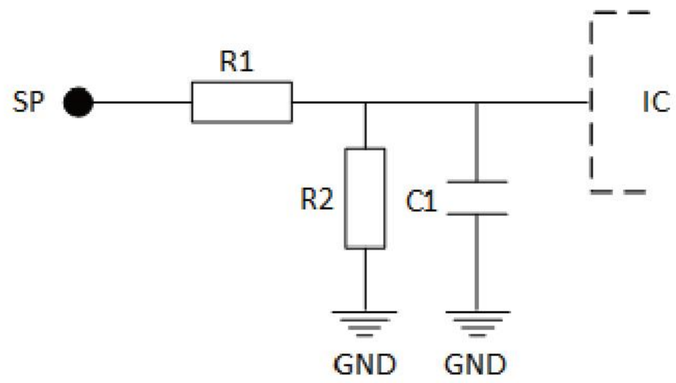

Speed output

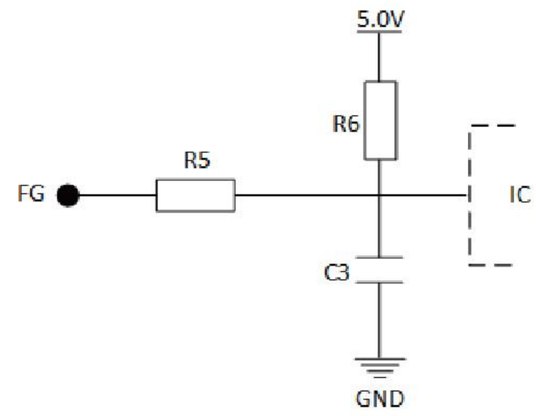

Direction command input

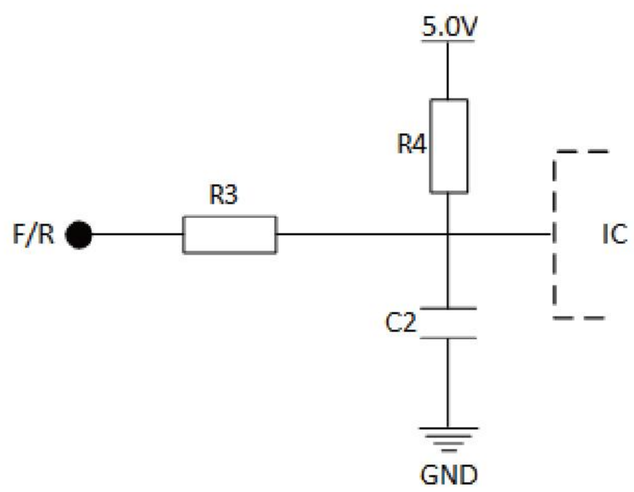

Speed output signal

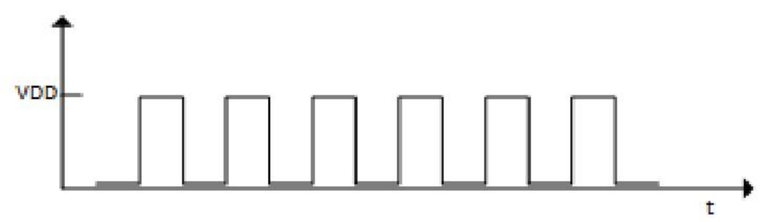

Electrical Connections

Version	Description	
5-Wire	1	Power supply
	2	GND
	3	Speed command input(SP)
	4	Dirction command input(F/R)
	5	Speed signal output (FG)

ECD12 and ECD16, because these two models use integrated chips.

The built-in series product interface is configured up to five wires, with three function pins, namely speed control SP (compatible with analog voltage and PWM duty cycle control, PWM frequency range of 10KHz -35KHz, 5V TTL level), forward and reverse control F/R (CCW operation by default, CW operation by connecting ground), speed feedback output FG (one pulse per turn). If you need enable and brake functions, you need to replace the two functions among three function pins above.

Please note that the standard products in the catalog are two-wire, only power and ground wires

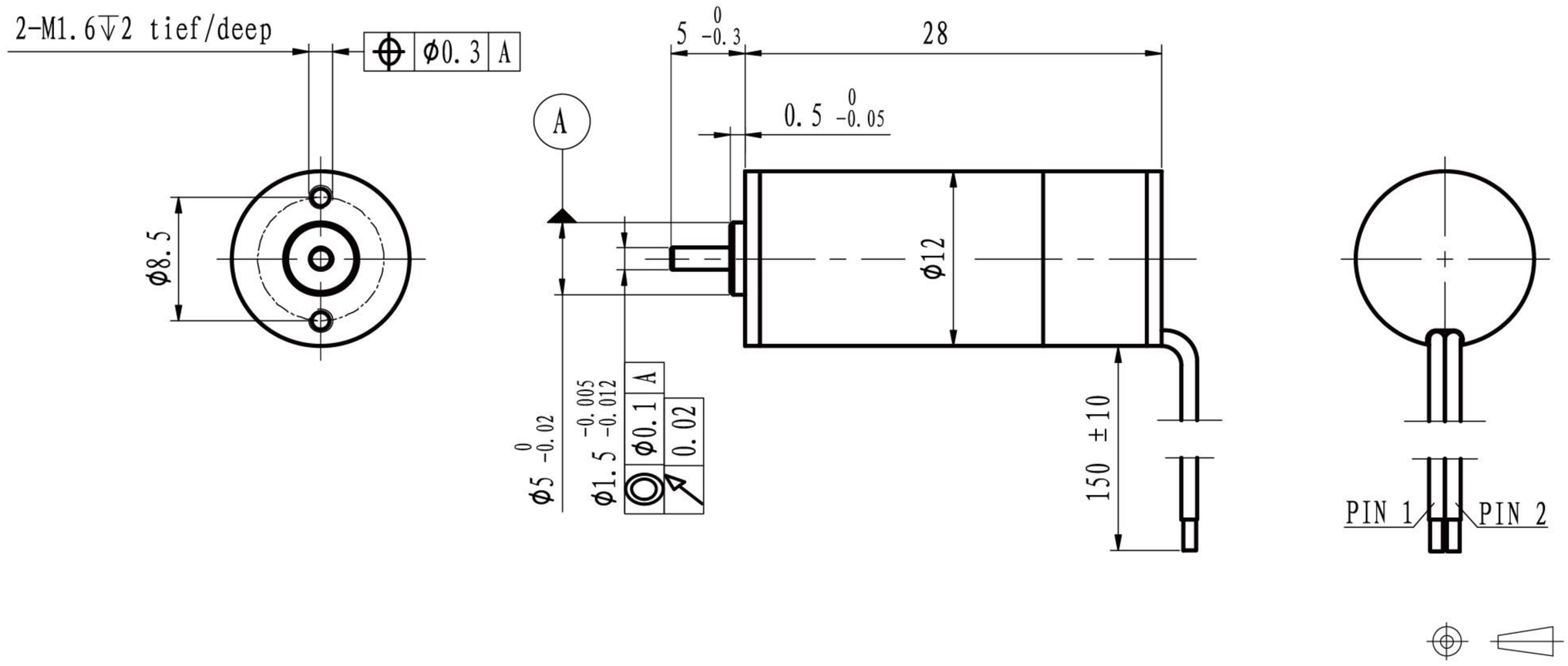

	Sensorless	ECD1228L-…	0631
Motor data			
Values at nominal voltage			
1	Nominal voltage	V	6
2	No load speed	rpm	31000
3	No load current	mA	140
4	Nominal speed	rpm	27755
5	Nominal torque	mNm	0.5
6	Nominal current	A	0.42
7	Stall torque	mNm	4.78
8	Stall current	A	2.86
9	Max. efficiency	%	60.6
10	Supply voltage +Vcc	V	4.5..7
11	Direction of ratation		CW
12	Torque constant	mNm/A	1.76
13	Speed constant	rpm/V	5433
14	Speed/torque gradient	rpm/mNm	6491
15	Mechanical time constant	ms	11.6
16	Rotor inertia	gcm^2	0.17
17	Thermal resistance housing-ambient	38.3 K/W	
18	Thermal resistance winding-housing	9.6 K/W	
19	Thermal time constant winding	5 s	
20	Thermal time constant motor	196 s	
21	Ambient temprature	-30…+100℃	
22	Max. permissible winding temperature	+125℃	
23	Max. permissible speed	50000 rpm	
24	Axial play at axial load <0.8 N	0 mm	
	>0.8 N	max. 0.3 mm	
25	Radial play	preloaded	
26	Max. axial load (dynamic)	0.3	
27	Max.force for press fits (static)	11N	
	(static, shaft supported)	200 N	
28	Max. radial loading, 5mm from flange	4.3 N	
29	Number of pole pairs	1	
30	Number of phases	3	
31	Weight of motor	12.2 g	

Operating Range

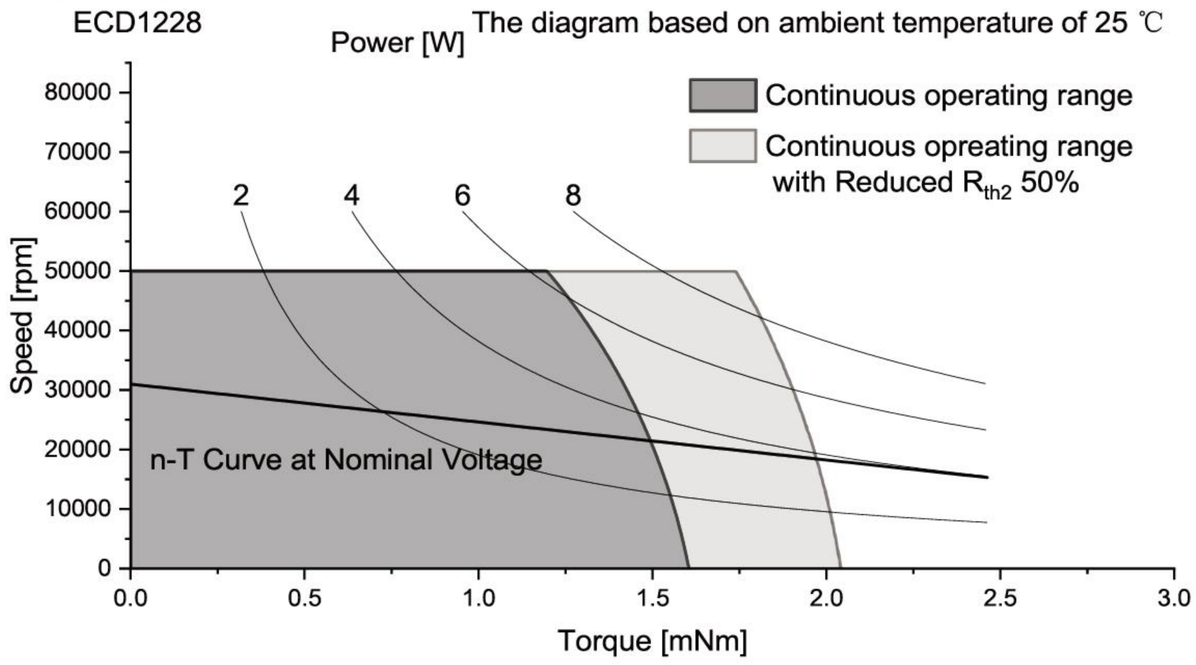

Controller features	
Sensor, Open loop, Imax < 0.5A	
Overload protection, Stall protection	
Max. temperature of electronics	+105℃

Connection

Conection		PTFE	
Pin 1	+VCC	AWG24	red
Pin 2	GND	AWG24	black

Caution:
Incorrect lead connection will damage the controller!

Configuration

Function: On&Off/Direction/Speed control/Brake
Speed closed&open-loop Control/Speed feedback
Performance: Customized in the continuous operating range
Ball bearing: Preload
Flange: Standard frange front&back/customize the frange
Shaft: Length/Diameter/Cut face
Leadwire: PVC/Silicon/Teflon/UL No/Dimension/length
Connector: JST/MOLEX/TE

More:
Please contact our sales engineers

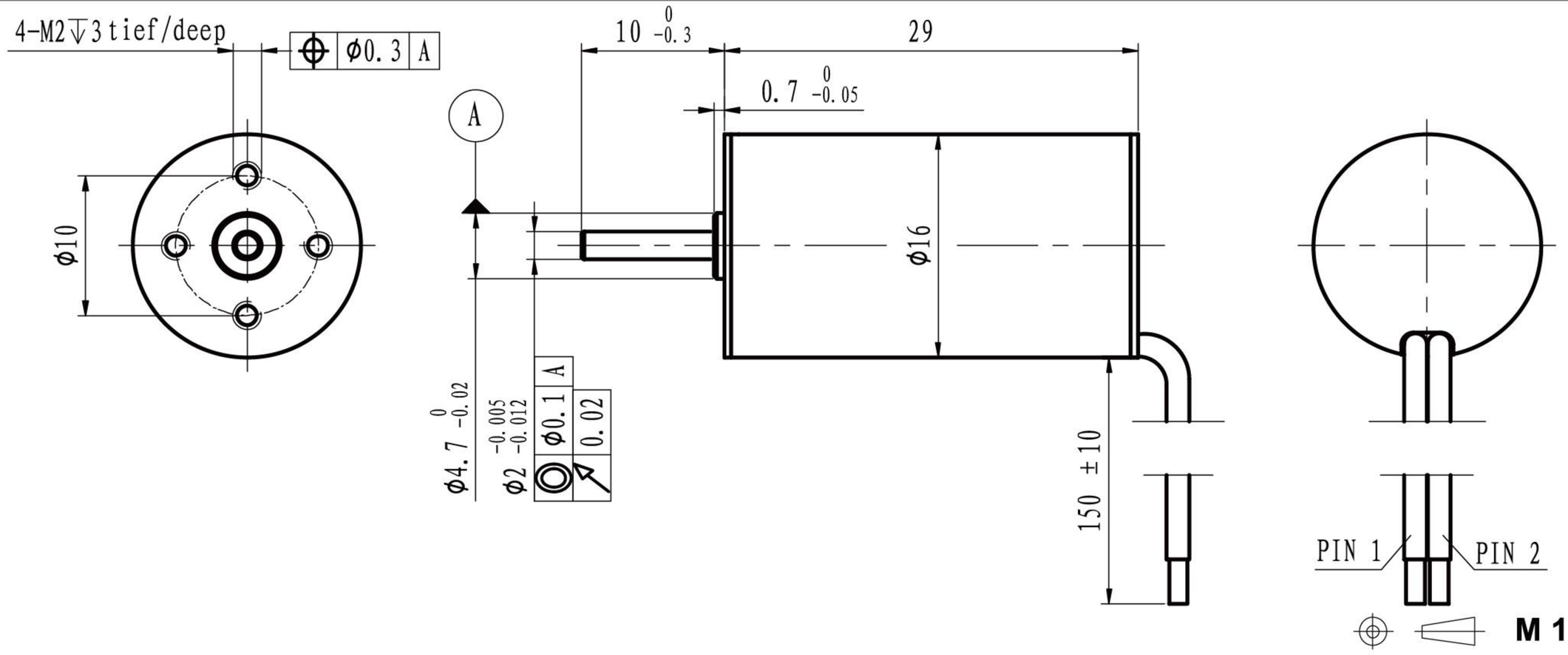

	Sensorless	ECD1629L-…	0612	1212						
Motor data										
Values at nominal voltage										
1	Nominal voltage	V	6	12						
2	No load speed	rpm	12150	12035						
3	No load current	mA	130	80						
4	Nominal speed	rpm	9534	9561						
5	Nominal torque	mNm	2	2						
6	Nominal current	A	0.58	0.31						
7	Stall torque	mNm	9.29	9.73						
8	Stall current	A	2.22	1.18						
9	Max. efficiency	%	57.5	54.6						
10	Supply voltage +Vcc	V	4.5..7	8..13						
11	Direction of ratation		CW	CW						
12	Torque constant	mNm/A	4.44	8.87						
13	Speed constant	rpm/V	2151	1076						
14	Speed/torque gradient	rpm/mNm	1308	1237						
15	Mechanical time constant	ms	6.4	6.1						
16	Rotor inertia	gcm^2	0.47	0.47						

17	Thermal resistance housing-ambient		20.2 K/W
18	Thermal resistance winding-housing		6.6 K/W
19	Thermal time constant winding		8 s
20	Thermal time constant motor		216 s
21	Ambient temprature		-30…+100℃
22	Max. permissible winding temperature		+150℃
23	Max. permissible speed		35000 rpm
24	Axial play at axial load	<1.8 N	0 mm
		>1.8 N	max. 0.3 mm
25	Radial play		preloaded
26	Max. axial load (dynamic)		1.3 N
27	Max.force for press fits (static)		15 N
	(static, shaft supported)		350 N
28	Max. radial loading, 5mm from flange		5 N
29	Number of pole pairs		1
30	Number of phases		3
31	Weight of motor		21 g

Operating Range

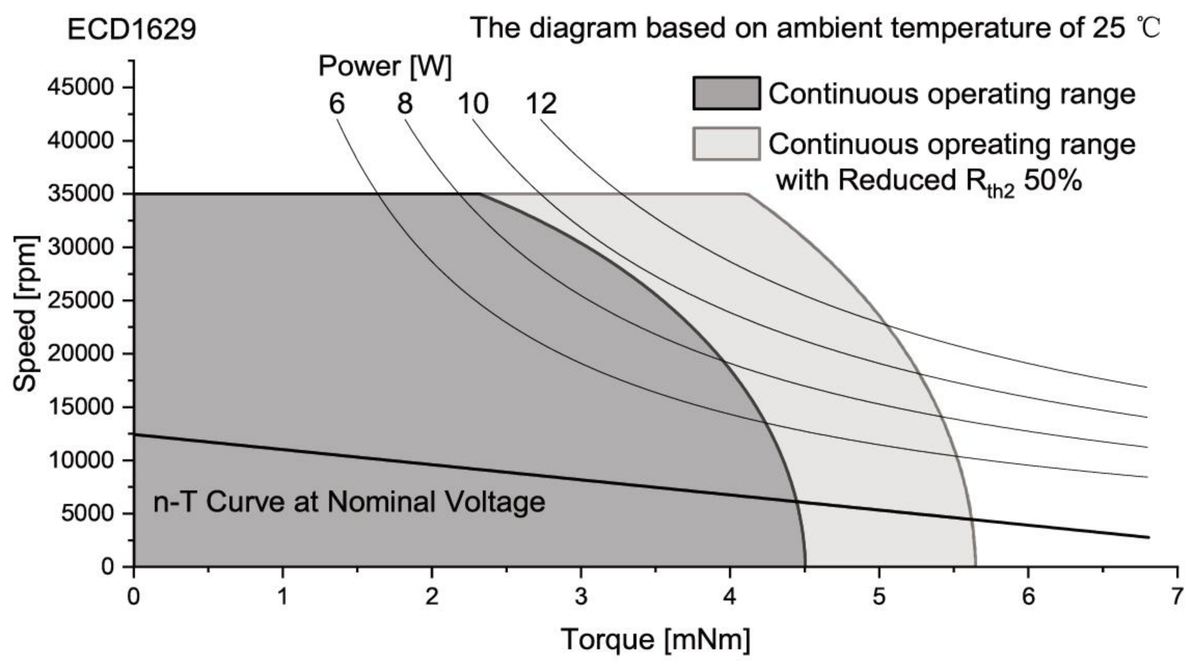

Controller features	
Sensorless, Open loop, Imax < 0.5A	
Overload protection, Stall protection	
Max. temperature of electronics	+105℃

Connection

Conection		PTFE	
Pin 1	+VCC	AWG24	red
Pin 2	GND	AWG24	black

Caution:
Incorrect lead connection will damage the controller!

Configuration

Function: On&Off/Direction/Speed control/Brake
Speed closed&open-loop Control/Speed feedback
Performance: Customized in the continuous operating range
Ball bearing: Preload
Flange: Standard frange front&back/customize the frange
Shaft: Length/Diameter/Cut face
Leadwire: PVC/Silicon/Teflon/UL No/Dimension/length
Connector: JST/MOLEX/TE

More:
Please contact our sales engineers

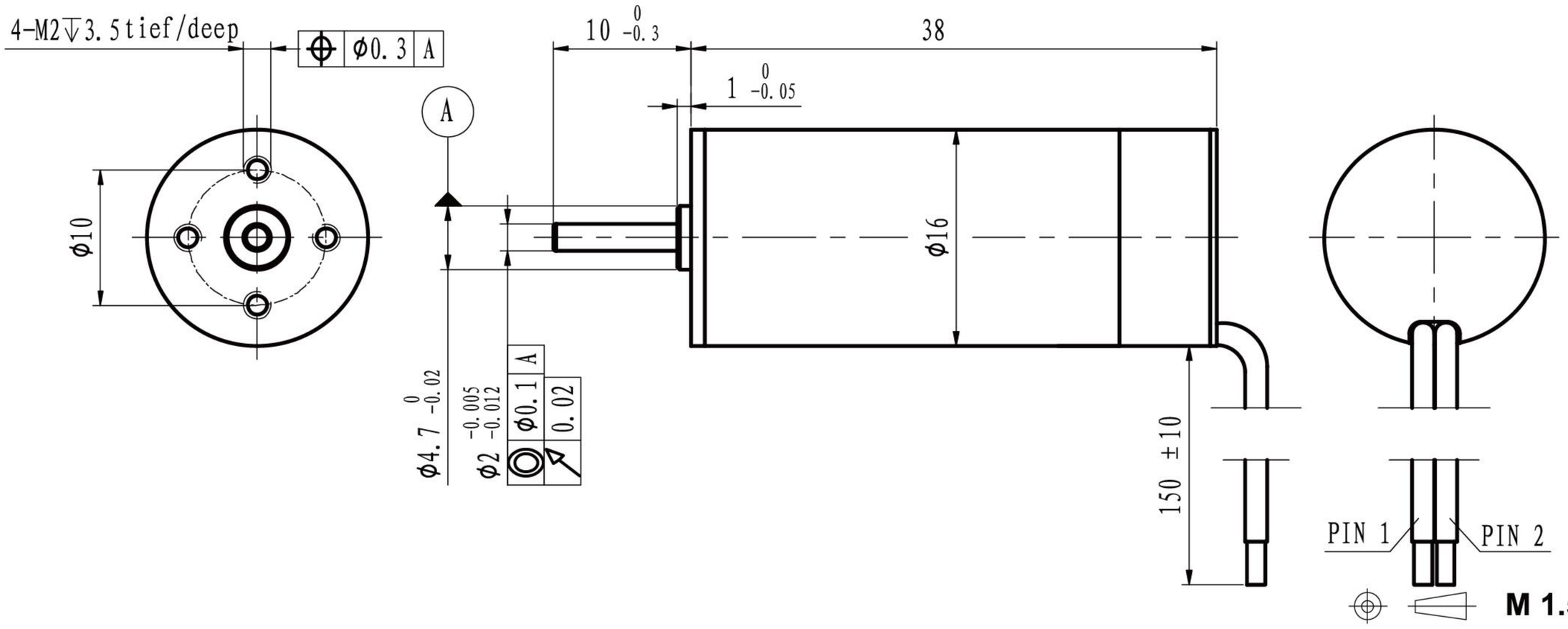

	Sensorless	ECD1638L-…	0617	1217						
Motor data										
Values at nominal voltage										
1	Nominal voltage	V	6	12						
2	No load speed	rpm	17310	17664						
3	No load current	mA	190	100						
4	Nominal speed	rpm	15037	15284						
5	Nominal torque	mNm	1.5	1.5						
6	Nominal current	A	0.67	0.34						
7	Stall torque	mNm	11.42	11.13						
8	Stall current	A	3.82	1.91						
9	Max. efficiency	%	60.4	59.5						
10	Supply voltage +Vcc	V	4.5..7	8..13						
11	Direction of ratation		CW	CW						
12	Torque constant	mNm/A	3.15	6.15						
13	Speed constant	rpm/V	3036	1553						
14	Speed/torque gradient	rpm/mNm	1515	1587						
15	Mechanical time constant	ms	6.3	6.6						
16	Rotor inertia	gcm^2	0.4	0.4						

17	Thermal resistance housing-ambient		20.2 K/W
18	Thermal resistance winding-housing		8.7 K/W
19	Thermal time constant winding		7 s
20	Thermal time constant motor		238 s
21	Ambient temprature		-30…+100℃
22	Max. permissible winding temperature		+150℃
23	Max. permissible speed		35000 rpm
24	Axial play at axial load	<1.8 N	0 mm
		>1.8 N	max. 0.3 mm
25	Radial play		preloaded
26	Max. axial load (dynamic)		1.3 N
27	Max.force for press fits (static)		15 N
	(static, shaft supported)		350 N
28	Max. radial loading, 5mm from flange		5 N
29	Number of pole pairs		1
30	Number of phases		3
31	Weight of motor		27 g

Operating Range

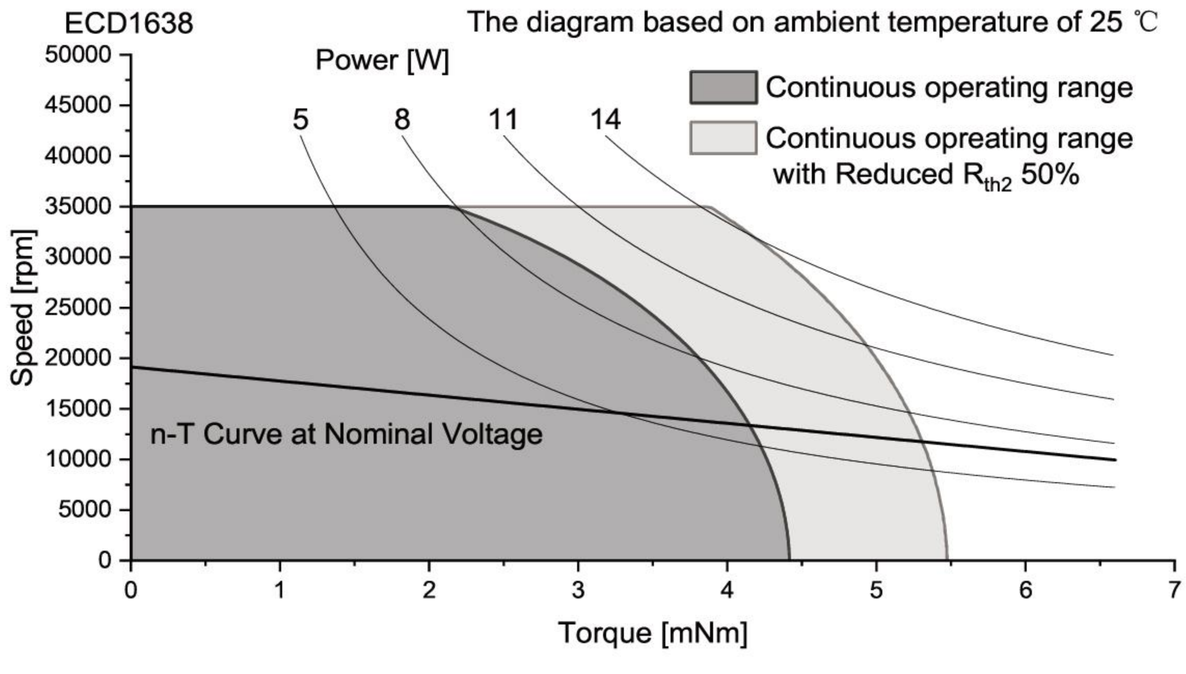

Controller features	
Sensorless, Open loop, Imax < 0.5A	
Overload protection, Stall protection	
Max. temperature of electronics	+105℃

Connection

Conection		PTFE	
Pin 1	+VCC	AWG24	red
Pin 2	GND	AWG24	black

Caution:
Incorrect lead connection will damage the controller!

Configuration

Function: On&Off/Direction/Speed control/Brake
Speed closed&open-loop Control/Speed feedback
Performance: Customized in the continuous operating range
Ball bearing: Preload
Flange: Standard frange front&back/customize the frange
Shaft: Length/Diameter/Cut face
Leadwire: PVC/Silicon/Teflon/UL No/Dimension/length
Connector: JST/MOLEX/TE

More:
Please contact our sales engineers

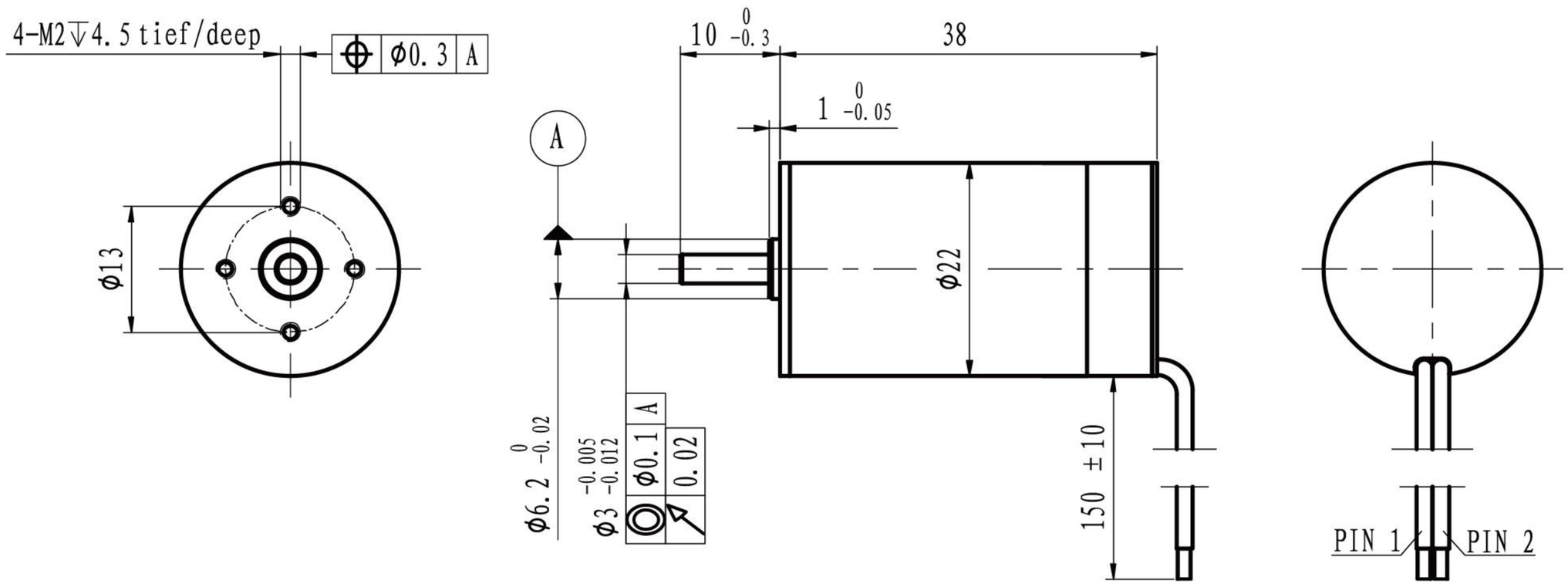

M 1:1

	With hall sensor	ECD2238S-…	1218	2418
Motor data				
Values at nominal voltage				
1	Nominal voltage	V	12	24
2	No load speed	rpm	17445	17721
3	No load current	mA	220	110
4	Nominal speed	rpm	15172	15134
5	Nominal torque	mNm	6	6
6	Nominal current	A	1.16	0.59
7	Stall torque	mNm	46.05	41.10
8	Stall current	A	7.44	3.39
9	Max. efficiency	%	68.6	67.2
10	Supply voltage +Vcc	V	10..28	10.28
11	Direction of ratation		CW	CW
12	Torque constant	mNm/A	6.37	12.51
13	Speed constant	rpm/V	1498	763
14	Speed/torque gradient	rpm/mNm	379	431
15	Mechanical time constant	ms	6.0	6.8
16	Rotor inertia	gcm^2	1.5	1.5

17	Thermal resistance housing-ambient	15.2 K/W
18	Thermal resistance winding-housing	6.0 K/W
19	Thermal time constant winding	11 s
20	Thermal time constant motor	383 s
21	Ambient temprature	-30…+100℃
22	Max. permissible winding temperature	+150℃
23	Max. permissible speed	35000 rpm
24	Axial play at axial load <4 N	0 mm
	>4 N	max. 0.3 mm
25	Radial play	preloaded
26	Max. axial load (dynamic)	3.5 N
27	Max.force for press fits (static)	44 N
	(static, shaft supported)	1200 N
28	Max. radial loading, 5mm from flange	15 N
29	Number of pole pairs	1
30	Number of phases	3
31	Weight of motor	63 g

Operating Range

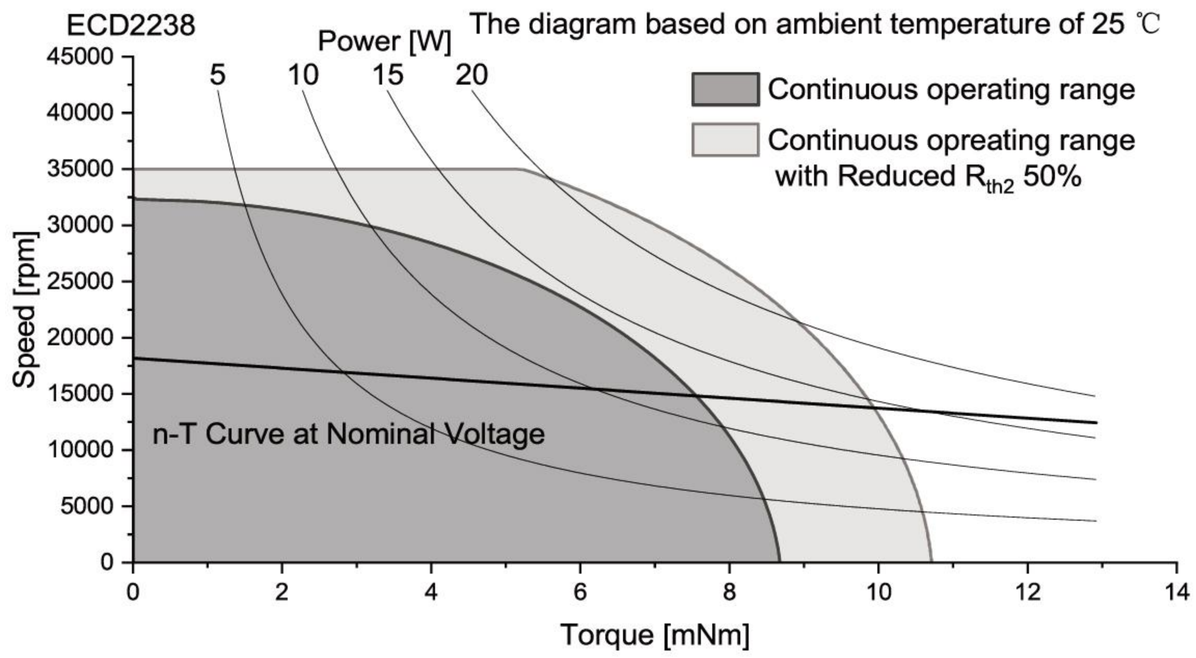

Controller features		
	Sensor, Open loop, Imax < 1.5A	
	Overload protection, Stall protection	
	Max. temperature of electronics	+105℃

Connection

Conection		PTFE		
	Pin 1	+VCC	AWG24	red
	Pin 2	GND	AWG24	black

Caution:
Incorrect lead connection will damage the controller!

Configuration

Function: On&Off/Direction/Speed control/Brake
Speed closed&open-loop Control/Speed feedback
Performance: Customized in the continuous operating range
Ball bearing: Preload
Flange: Standard frange front&back/customize the frange
Shaft: Length/Diameter/Cut face
Leadwire: PVC/Silicon/Teflon/UL No/Dimension/length
Connector: JST/MOLEX/TE

More:
Please contact our sales engineers

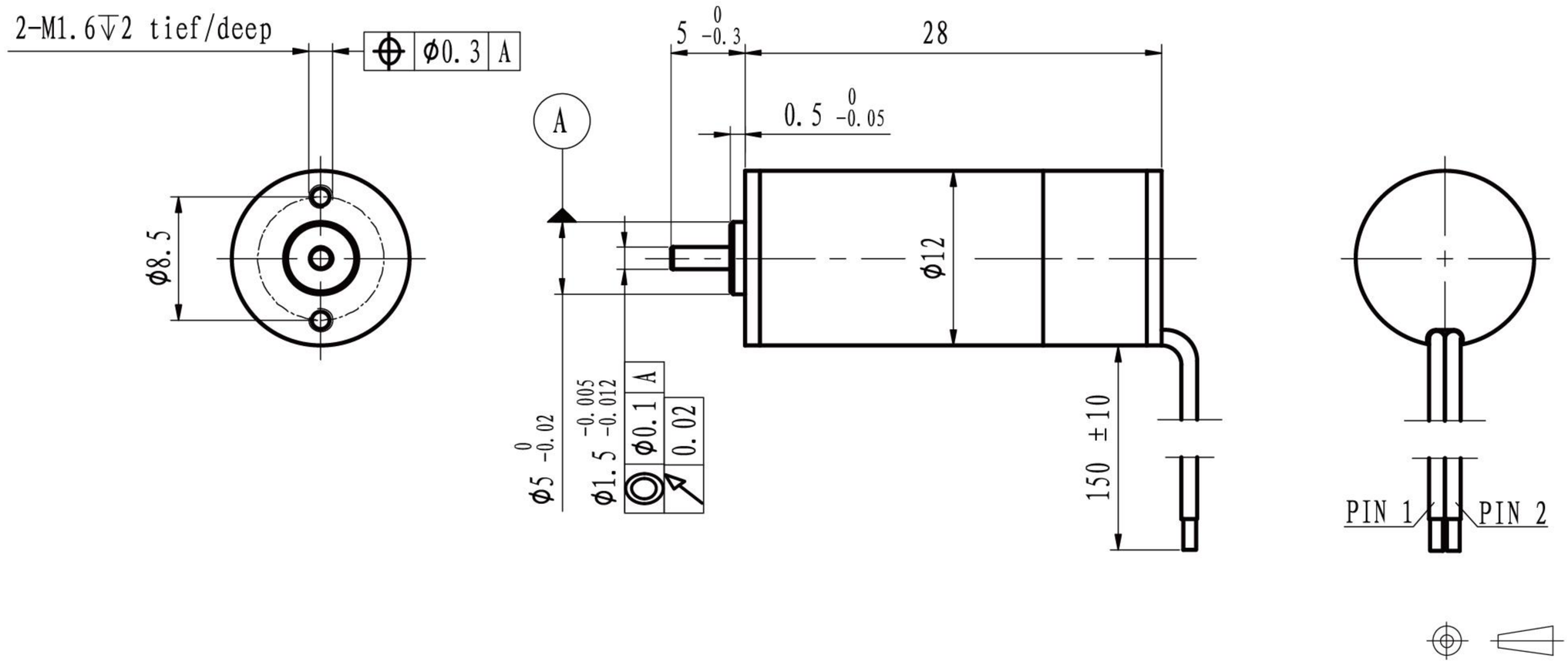

	Sensorless	ECD1228L-…	0631
Motor data			
Values at nominal voltage			
1	Nominal voltage	V	6
2	No load speed	rpm	31000
3	No load current	mA	140
4	Nominal speed	rpm	27755
5	Nominal torque	mNm	0.5
6	Nominal current	A	0.42
7	Stall torque	mNm	4.78
8	Stall current	A	2.86
9	Max. efficiency	%	60.6
10	Supply voltage +Vcc	V	4.5..7
11	Direction of ratation		CW
12	Torque constant	mNm/A	1.76
13	Speed constant	rpm/V	5433
14	Speed/torque gradient	rpm/mNm	6491
15	Mechanical time constant	ms	11.6
16	Rotor inertia	gcm^2	0.17
17	Thermal resistance housing-ambient	38.3 K/W	
18	Thermal resistance winding-housing	9.6 K/W	
19	Thermal time constant winding	5 s	
20	Thermal time constant motor	196 s	
21	Ambient temprature	-30…+100℃	
22	Max. permissible winding temperature	+125℃	
23	Max. permissible speed	50000 rpm	
24	Axial play at axial load <0.8 N	0 mm	
	>0.8 N	max. 0.3 mm	
25	Radial play	preloaded	
26	Max. axial load (dynamic)	0.3	
27	Max.force for press fits (static)	11N	
	(static, shaft supported)	200 N	
28	Max. radial loading, 5mm from flange	4.3 N	
29	Number of pole pairs	1	
30	Number of phases	3	
31	Weight of motor	12.2 g	

Operating Range

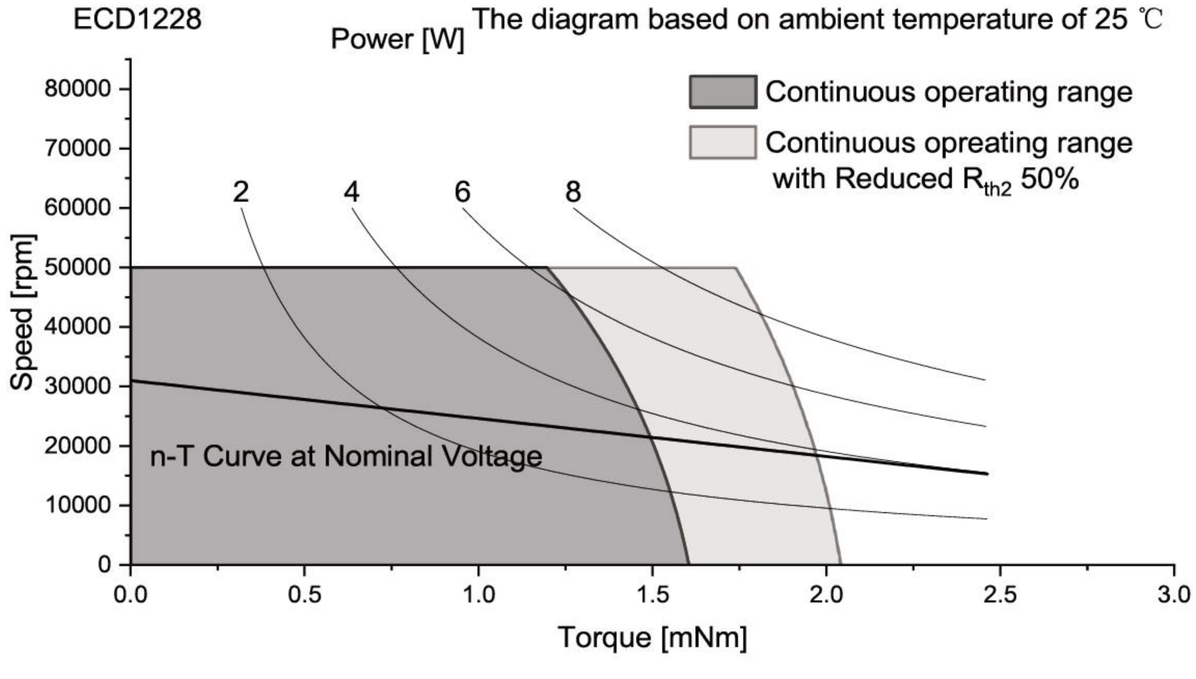

Controller features	
Sensor, Open loop, Imax < 0.5A	
Overload protection, Stall protection	
Max. temperature of electronics	+105℃

Connection

Conection		PTFE	
Pin 1	+VCC	AWG24	red
Pin 2	GND	AWG24	black

Caution:
Incorrect lead connection will damage the controller!

Configuration

Function: On&Off/Direction/Speed control/Brake
Speed closed&open-loop Control/Speed feedback
Performance: Customized in the continuous operating range
Ball bearing: Preload
Flange: Standard frange front&back/customize the frange
Shaft: Length/Diameter/Cut face
Leadwire: PVC/Silicon/Teflon/UL No/Dimension/length
Connector: JST/MOLEX/TE

More:
Please contact our sales engineers

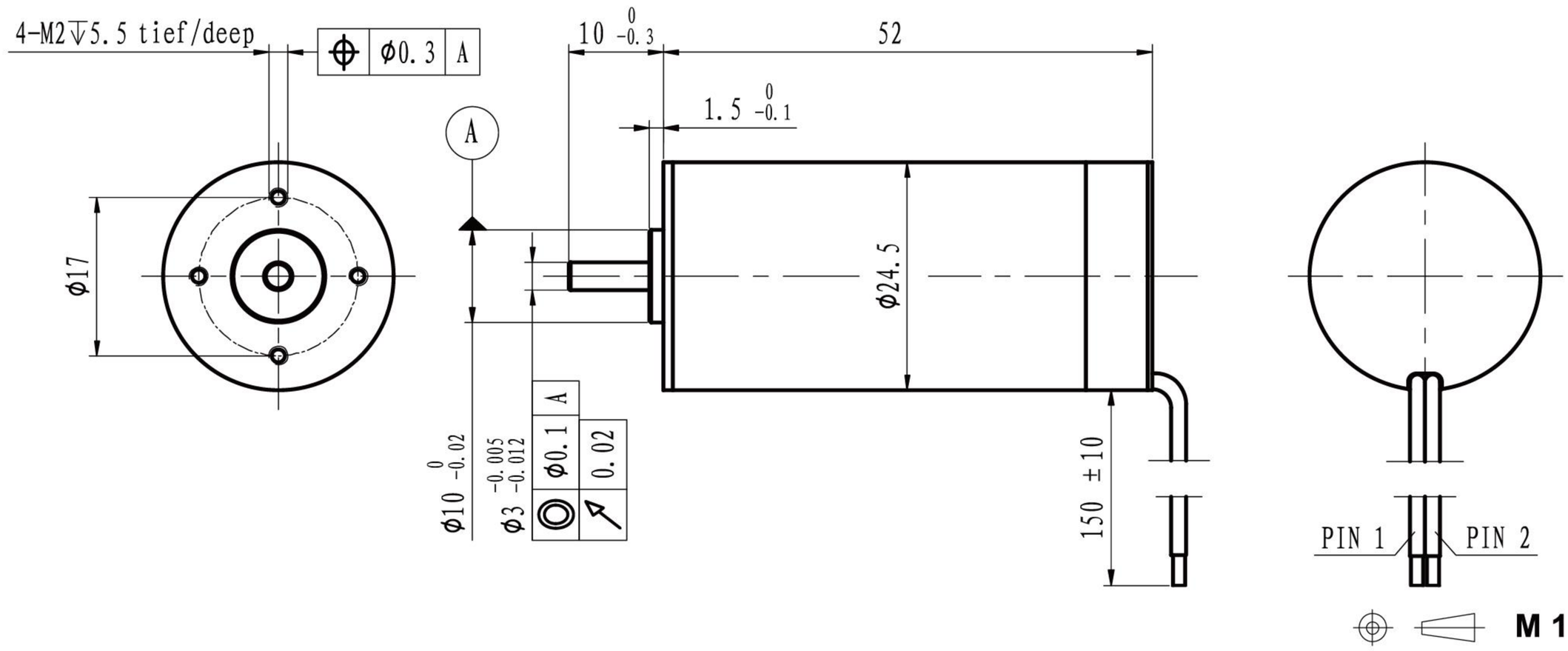

	With hall sensor	ECD2452S-…	1207	2407
Motor data				
Values at nominal voltage				
1	Nominal voltage	V	12	24
2	No load speed	rpm	6904	6980
3	No load current	mA	103	70
4	Nominal speed	rpm	5821	5832
5	Nominal torque	mNm	14	14
6	Nominal current	A	0.96	0.51
7	Stall torque	mNm	89.25	85.11
8	Stall current	A	5.58	2.73
9	Max. efficiency	%	74.7	70.5
10	Supply voltage +Vcc	V	10..28	8..13
11	Direction of ratation		CW	CW
12	Torque constant	mNm/A	16.29	31.99
13	Speed constant	rpm/V	586	298
14	Speed/torque gradient	rpm/mNm	77	82
15	Mechanical time constant	ms	3.4	3.6
16	Rotor inertia	gcm^2	4.2	4.2

17	Thermal resistance housing-ambient		11.6 K/W
18	Thermal resistance winding-housing		5.6 K/W
19	Thermal time constant winding		30 s
20	Thermal time constant motor		557 s
21	Ambient temprature		-30…+100℃
22	Max. permissible winding temperature		+150℃
23	Max. permissible speed		30000 rpm
24	Axial play at axial load	<4 N	0 mm
		>4 N	max. 0.3 mm
25	Radial play		preloaded
26	Max. axial load (dynamic)		3.5 N
27	Max.force for press fits (static)		44 N
	(static, shaft supported)		1200 N
28	Max. radial loading, 5mm from flange		15 N
29	Number of pole pairs		1
30	Number of phases		3
31	Weight of motor		112 g

Operating Range

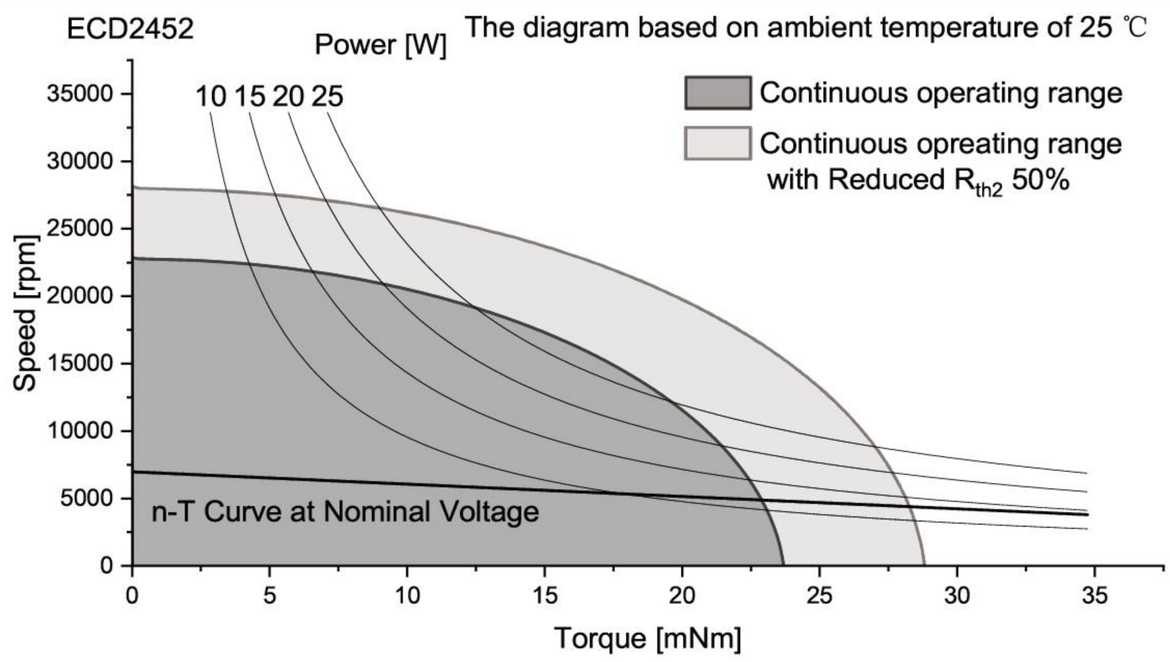

Controller features	
Sensor, Open loop, Imax < 1.5A	
Overload protection, Stall protection	
Max. temperature of electronics	+105℃

Connection

Conection		PTFE	
Pin 1	+VCC	AWG24	red
Pin 2	GND	AWG24	black

Caution:
Incorrect lead connection will damage the controller!

Configuration

Function: On&Off/Direction/Speed control/Brake
Speed closed&open-loop Control/Speed feedback
Performance: Customized in the continuous operating range
Ball bearing: Preload
Flange: Standard frange front&back/customize the frange
Shaft: Length/Diameter/Cut face
Leadwire: PVC/Silicon/Teflon/UL No/Dimension/length
Connector: JST/MOLEX/TE

More:
Please contact our sales engineers

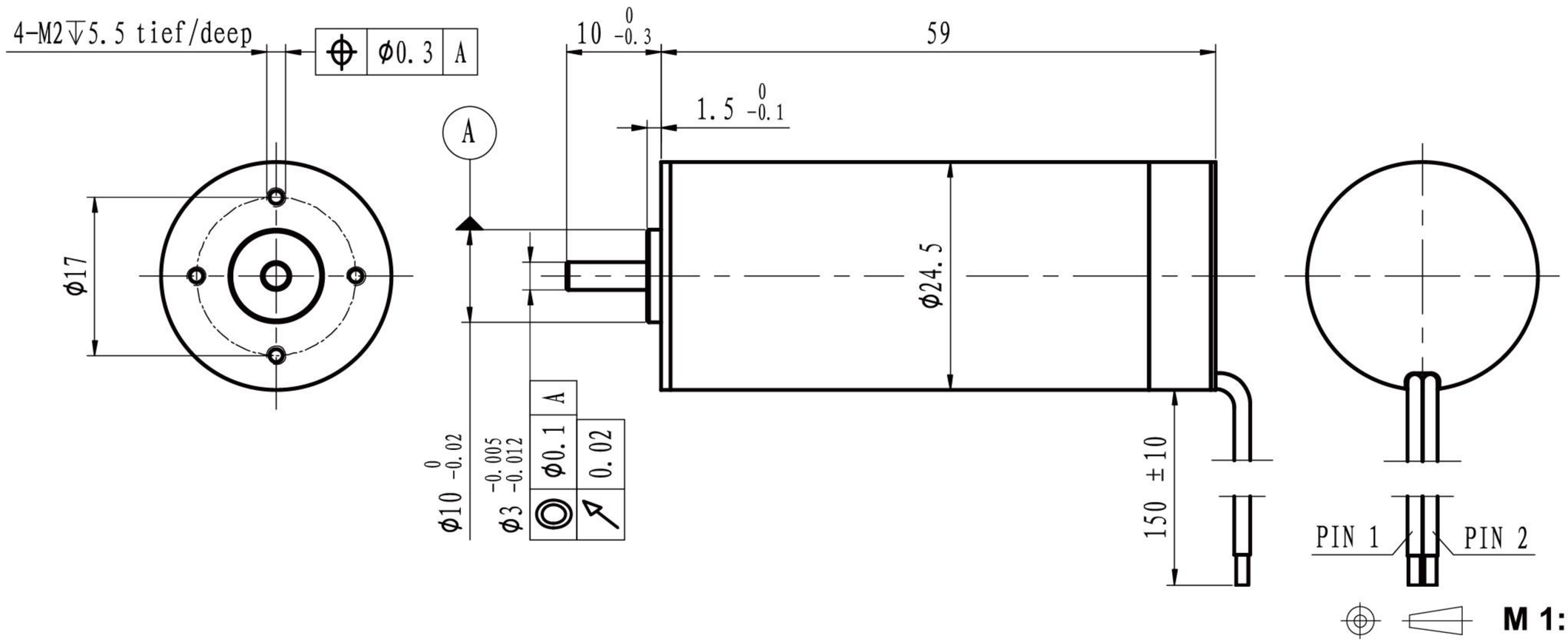

	With hall sensor	ECD2459S-…	1207	2407
Motor data				
Values at nominal voltage				
1	Nominal voltage	V	12	24
2	No load speed	rpm	7699	7655
3	No load current	mA	118	73
4	Nominal speed	rpm	6640	6597
5	Nominal torque	mNm	20	20
6	Nominal current	A	1.48	0.75
7	Stall torque	mNm	145.35	144.73
8	Stall current	A	10.00	4.98
9	Max. efficiency	%	79.5	77.2
10	Supply voltage +Vcc	V	10..28	10..28
11	Direction of ratation		CW	CW
12	Torque constant	mNm/A	14.71	29.50
13	Speed constant	rpm/V	649	324
14	Speed/torque gradient	rpm/mNm	53	53
15	Mechanical time constant	ms	3.3	3.3
16	Rotor inertia	gcm^2	5.9	5.9

17	Thermal resistance housing-ambient		10.2 K/W
18	Thermal resistance winding-housing		6.4 K/W
19	Thermal time constant winding		36 s
20	Thermal time constant motor		555 s
21	Ambient temprature		-30…+100℃
22	Max. permissible winding temperature		+150℃
23	Max. permissible speed		30000 rpm
24	Axial play at axial load	<4 N	0 mm
		>4 N	max. 0.3 mm
25	Radial play		preloaded
26	Max. axial load (dynamic)		3.5 N
27	Max.force for press fits (static)		44 N
	(static, shaft supported)		1200 N
28	Max. radial loading, 5mm from flange		15 N
29	Number of pole pairs		1
30	Number of phases		3
31	Weight of motor		130 g

Controller features	
Sensor, Open loop, Imax < 1.5A	
Overload protection, Stall protection	
Max. temperature of electronics	+105℃

Connection

Conection		PTFE	
Pin 1	+VCC	AWG24	red
Pin 2	GND	AWG24	black

Caution:
Incorrect lead connection will damage the controller!

Operating Range

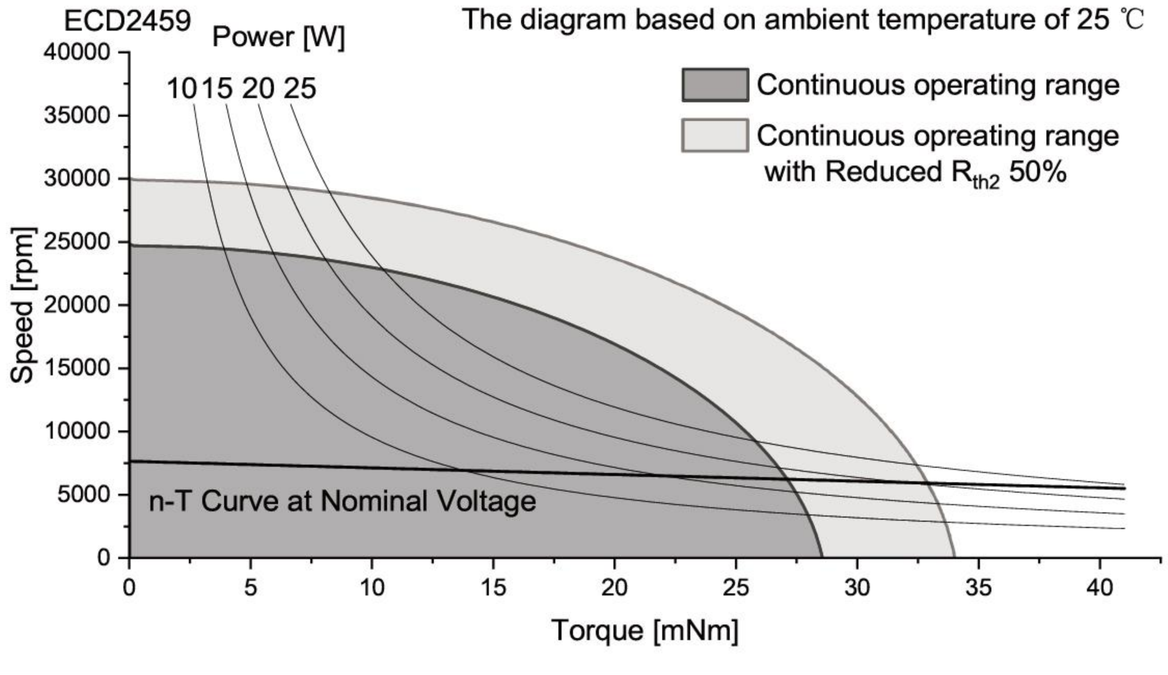

Configuration

Function: On&Off/Direction/Speed control/Brake
Speed closed&open-loop Control/Speed feedback
Performance: Customized in the continuous operating range
Ball bearing: Preload
Flange: Standard frange front&back/customize the frange
Shaft: Length/Diameter/Cut face
Leadwire: PVC/Silicon/Teflon/UL No/Dimension/length
Connector: JST/MOLEX/TE

More:
Please contact our sales engineers

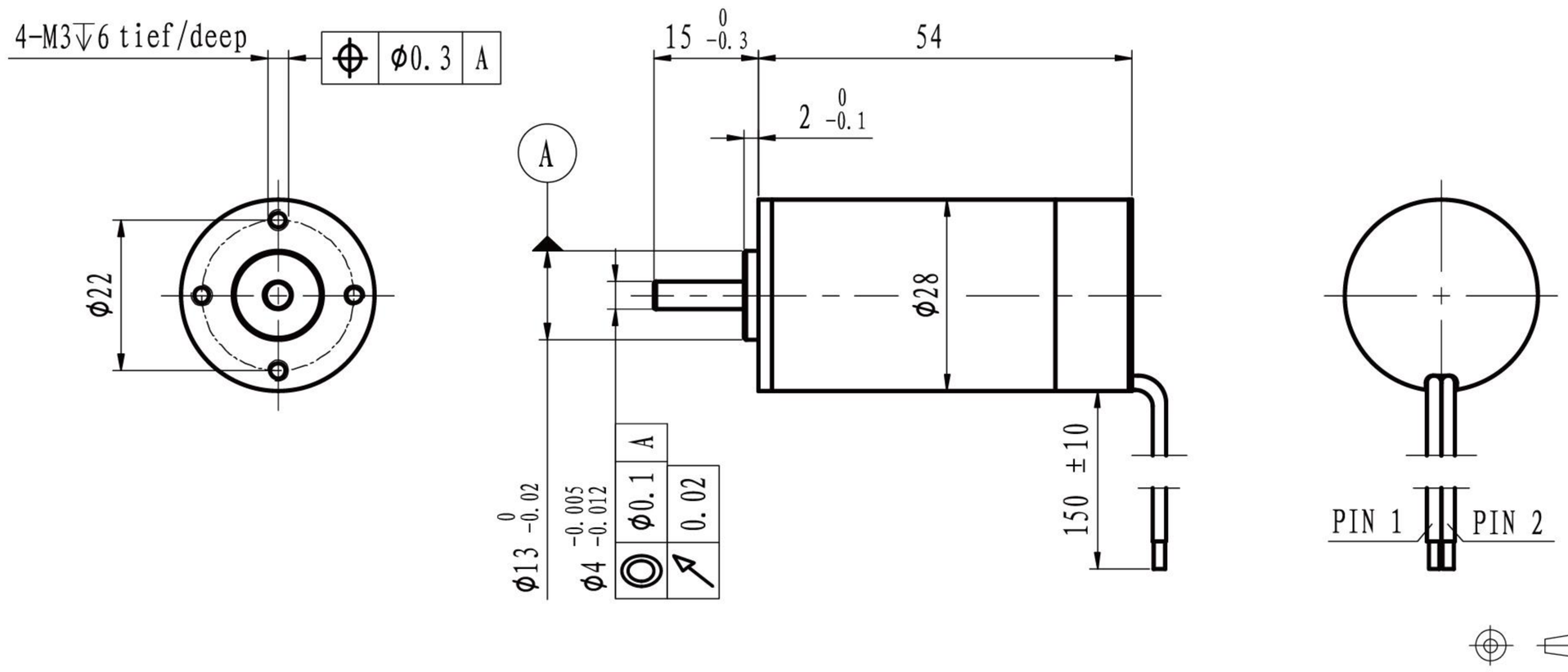

	With hall sensor	ECD2854S-…	1206	2406
Motor data				
Values at nominal voltage				
1	Nominal voltage	V	12	24
2	No load speed	rpm	6878	6700
3	No load current	mA	121	76
4	Nominal speed	rpm	5433	5157
5	Nominal torque	mNm	18	18
6	Nominal current	A	1.23	0.62
7	Stall torque	mNm	85.67	78.14
8	Stall current	A	5.38	2.43
9	Max. efficiency	%	72.3	67.8
10	Supply voltage +Vcc	V	10..28	10..28
11	Direction of ratation		CW	CW
12	Torque constant	mNm/A	16.29	33.14
13	Speed constant	rpm/V	586	288
14	Speed/torque gradient	rpm/mNm	80	86
15	Mechanical time constant	ms	4.4	4.7
16	Rotor inertia	gcm^2	5.2	5.2

17	Thermal resistance housing-ambient	9.6 K/W
18	Thermal resistance winding-housing	6.3 K/W
19	Thermal time constant winding	37 s
20	Thermal time constant motor	584 s
21	Ambient temprature	-30…+100℃
22	Max. permissible winding temperature	+150℃
23	Max. permissible speed	25000 rpm
24	Axial play at axial load <8 N	0 mm
	>8 N	max. 0.3 mm
25	Radial play	preloaded
26	Max. axial load (dynamic)	7.5 N
27	Max.force for press fits (static)	100 N
	(static, shaft supported)	2000 N
28	Max. radial loading, 5mm from flange	25 N
29	Number of pole pairs	1
30	Number of phases	3
31	Weight of motor	153 g

Operating Range

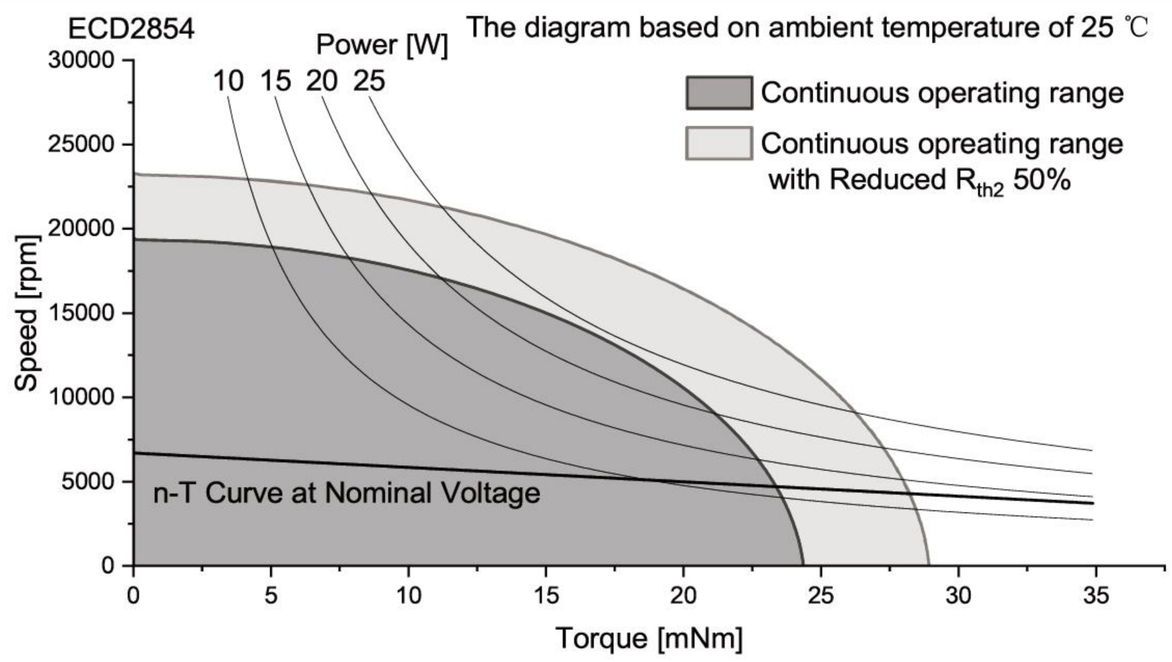

Controller features	
Sensor, Open loop, Imax < 1.8A	
Overload protection, Stall protection	
Max. temperature of electronics	+105℃

Connection

Conection

		PTFE	
Pin 1	+VCC	AWG20	red
Pin 2	GND	AWG20	black

Caution:
Incorrect lead connection will damage the controller!

Configuration

Function: On&Off/Direction/Speed control/Brake
Speed closed&open-loop Control/Speed feedback
Performance: Customized in the continuous operating range
Ball bearing: Preload
Flange: Standard frange front&back/customize the frange
Shaft: Length/Diameter/Cut face
Leadwire: PVC/Silicon/Teflon/UL No/Dimension/length
Connector: JST/MOLEX/TE

More:
Please contact our sales engineers

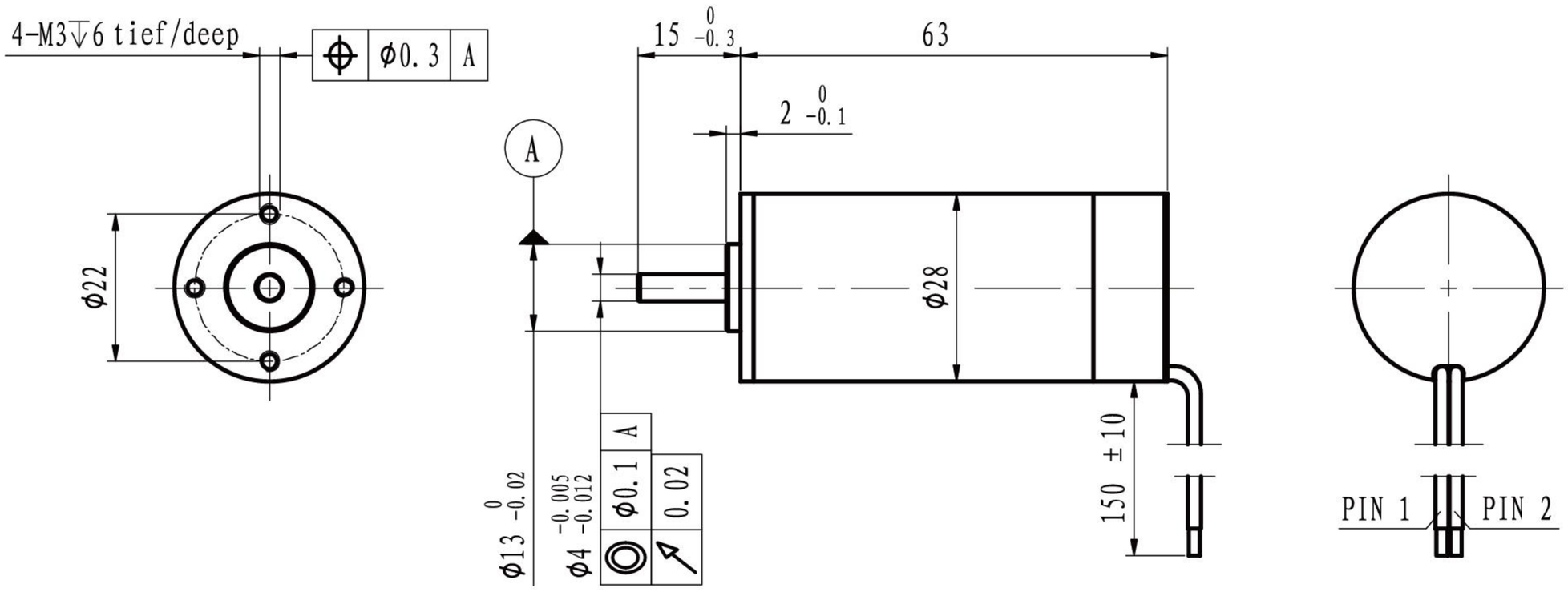

M 1:1.5

	With hall sensor	ECD2863S-…	1204	2404
Motor data				
Values at nominal voltage				
1	Nominal voltage	V	12	24
2	No load speed	rpm	4168	4163
3	No load current	mA	70	60
4	Nominal speed	rpm	3264	3033
5	Nominal torque	mNm	25	25
6	Nominal current	A	0.99	0.53
7	Stall torque	mNm	115.29	92.11
8	Stall current	A	4.33	1.79
9	Max. efficiency	%	76.2	66.7
10	Supply voltage +Vcc	V	4.5..7	8..13
11	Direction of ratation		CW	CW
12	Torque constant	mNm/A	27.05	53.21
13	Speed constant	rpm/V	353	179
14	Speed/torque gradient	rpm/mNm	36	45
15	Mechanical time constant	ms	3.2	4.0
16	Rotor inertia	gcm^2	8.5	8.5

17	Thermal resistance housing-ambient	7.1 K/W
18	Thermal resistance winding-housing	5 K/W
19	Thermal time constant winding	51 s
20	Thermal time constant motor	552 s
21	Ambient temprature	-30…+100℃
22	Max. permissible winding temperature	+150℃
23	Max. permissible speed	25000 rpm
24	Axial play at axial load <8 N	0 mm
	>8 N	max. 0.3 mm
25	Radial play	preloaded
26	Max. axial load (dynamic)	7.5 N
27	Max.force for press fits (static)	100 N
	(static, shaft supported)	2000 N
28	Max. radial loading, 5mm from flange	25 N
29	Number of pole pairs	1
30	Number of phases	3
31	Weight of motor	188 g

Operating Range

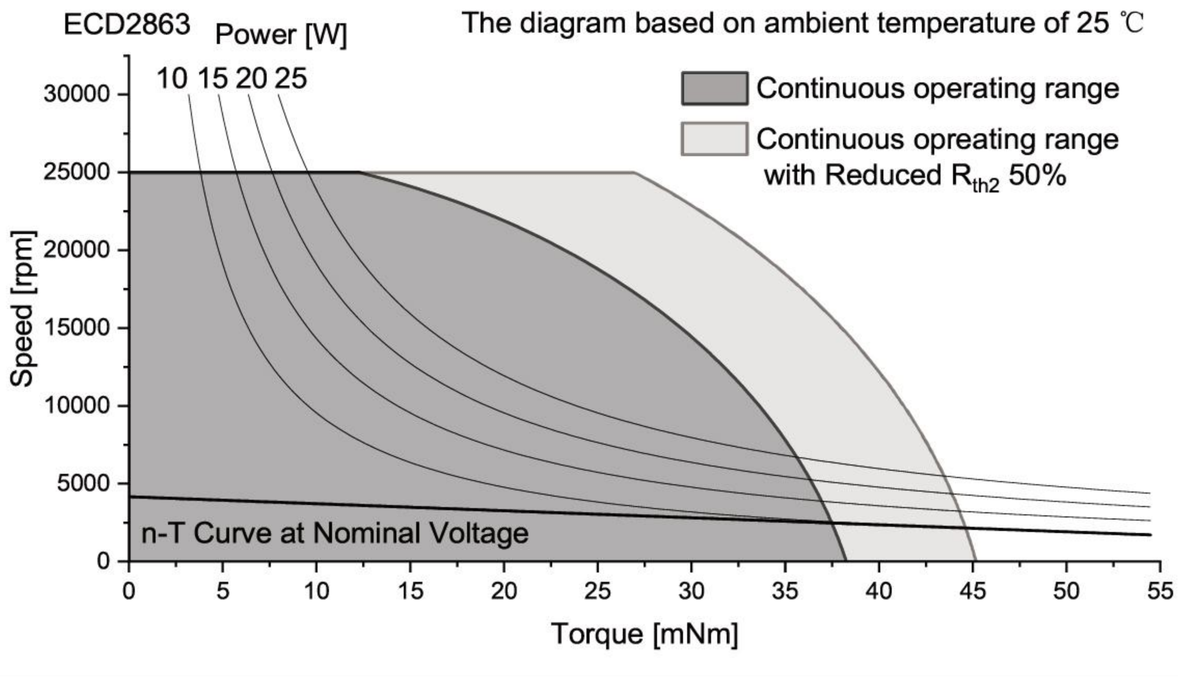

Controller features	
Sensor, Open loop, Imax < 1.8A	
Overload protection, Stall protection	
Max. temperature of electronics	+105℃

Connection

Conection		PTFE	
Pin 1	+VCC	AWG20	red
Pin 2	GND	AWG20	black

Caution:
Incorrect lead connection will damage the controller!

Configuration

Function: On&Off/Direction/Speed control/Brake
Speed closed&open-loop Control/Speed feedback
Performance: Customized in the continuous operating range
Ball bearing: Preload
Flange: Standard frange front&back/customize the frange
Shaft: Length/Diameter/Cut face
Leadwire: PVC/Silicon/Teflon/UL No/Dimension/length
Connector: JST/MOLEX/TE

More:
Please contact our sales engineers

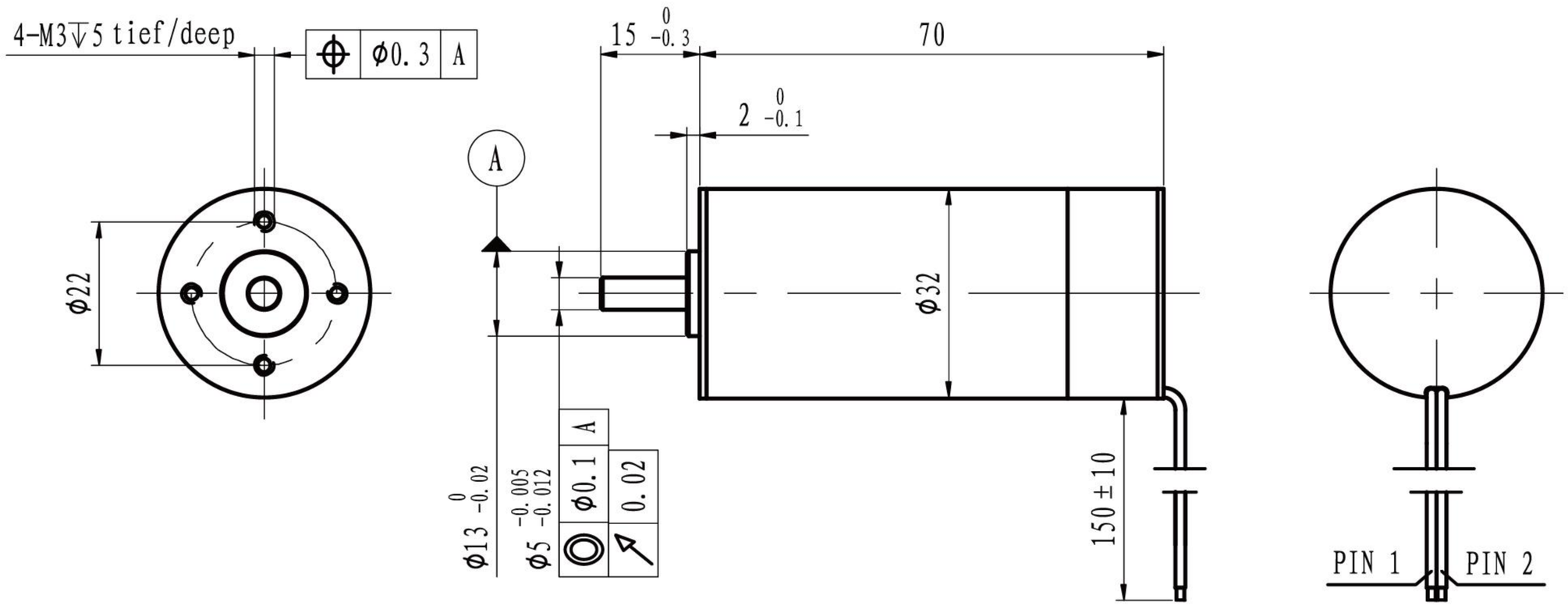

M 1:1.5

With hall sensor	ECD3270S-…	1207	2407
Motor data			
Values at nominal voltage			
1 Nominal voltage	V	12	24
2 No load speed	rpm	7200	7100
3 No load current	mA	194	110
4 Nominal speed	rpm	6277	6243
5 Nominal torque	mNm	40	40
6 Nominal current	A	2.73	1.36
7 Stall torque	mNm	312.16	331.23
8 Stall current	A	20.00	10.48
9 Max. efficiency	%	81.3	80.6
10 Supply voltage +Vcc	V	10..28	10..28
11 Direction of ratation		CW	CW
12 Torque constant	mNm/A	15.76	31.94
13 Speed constant	rpm/V	606	299
14 Speed/torque gradient	rpm/mNm	23	21
15 Mechanical time constant	ms	3.7	3.5
16 Rotor inertia	gcm^2	15.5	15.5

17	Thermal resistance housing-ambient	5 K/W
18	Thermal resistance winding-housing	4 K/W
19	Thermal time constant winding	52 s
20	Thermal time constant motor	540 s
21	Ambient temprature	-30…+100℃
22	Max. permissible winding temperature	+150℃
23	Max. permissible speed	25000 rpm
24	Axial play at axial load <8 N	0 mm
	>8 N	max. 0.3 mm
25	Radial play	preloaded
26	Max. axial load (dynamic)	7.5 N
27	Max.force for press fits (static)	100 N
	(static, shaft supported)	2700 N
28	Max. radial loading, 5mm from flange	25 N
29	Number of pole pairs	1
30	Number of phases	3
31	Weight of motor	255 g

Operating Range

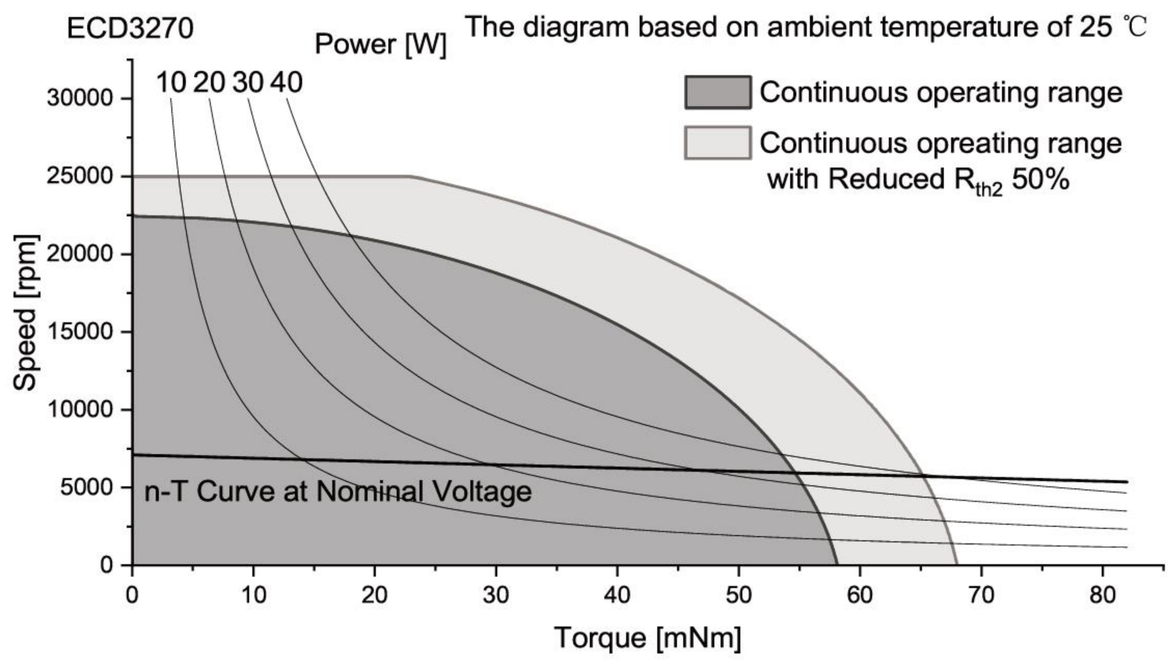

Controller features	
Sensor, Open loop, Imax < 2.2A	
Overload protection, Stall protection	
Max. temperature of electronics	+105℃

Connection

Conection		PTFE	
Pin 1	+VCC	AWG20	red
Pin 2	GND	AWG20	black

Caution:
Incorrect lead connection will damage the controller!

Configuration

Function: On&Off/Direction/Speed control/Brake
Speed closed&open-loop Control/Speed feedback
Performance: Customized in the continuous operating range
Ball bearing: Preload
Flange: Standard frange front&back/customize the frange
Shaft: Length/Diameter/Cut face
Leadwire: PVC/Silicon/Teflon/UL No/Dimension/length
Connector: JST/MOLEX/TE

More:
Please contact our sales engineers

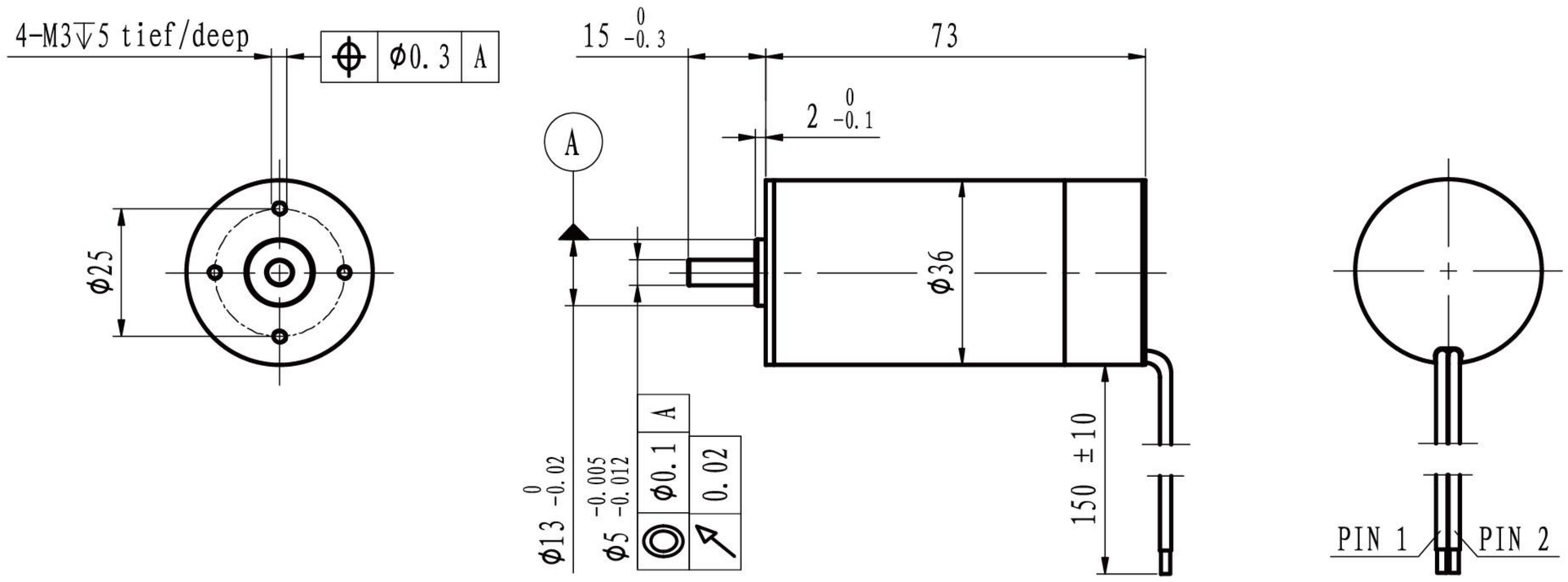

M 1:2

	With hall sensor	ECD3673S-…	1204	2404
Motor data				
Values at nominal voltage				
1	Nominal voltage	V	12	24
2	No load speed	rpm	4070	4042
3	No load current	mA	148	84
4	Nominal speed	rpm	3229	3223
5	Nominal torque	mNm	50	50
6	Nominal current	A	1.95	0.98
7	Stall torque	mNm	242.00	246.84
8	Stall current	A	8.89	4.52
9	Max. efficiency	%	75.9	74.6
10	Supply voltage +Vcc	V	10..28	10..28
11	Direction of ratation		CW	CW
12	Torque constant	mNm/A	27.69	55.65
13	Speed constant	rpm/V	345	172
14	Speed/torque gradient	rpm/mNm	17	16
15	Mechanical time constant	ms	3.4	3.3
16	Rotor inertia	gcm^2	19.5	19.5

17	Thermal resistance housing-ambient	4.9 K/W
18	Thermal resistance winding-housing	1.6 K/W
19	Thermal time constant winding	45 s
20	Thermal time constant motor	630 s
21	Ambient temprature	-30…+100℃
22	Max. permissible winding temperature	+150℃
23	Max. permissible speed	20000 rpm
24	Axial play at axial load <8 N	0 mm
	>8 N	max. 0.3 mm
25	Radial play	preloaded
26	Max. axial load (dynamic)	7.5 N
27	Max.force for press fits (static)	100 N
	(static, shaft supported)	2700 N
28	Max. radial loading, 5mm from flange	25 N
29	Number of pole pairs	1
30	Number of phases	3
31	Weight of motor	317 g

Operating Range

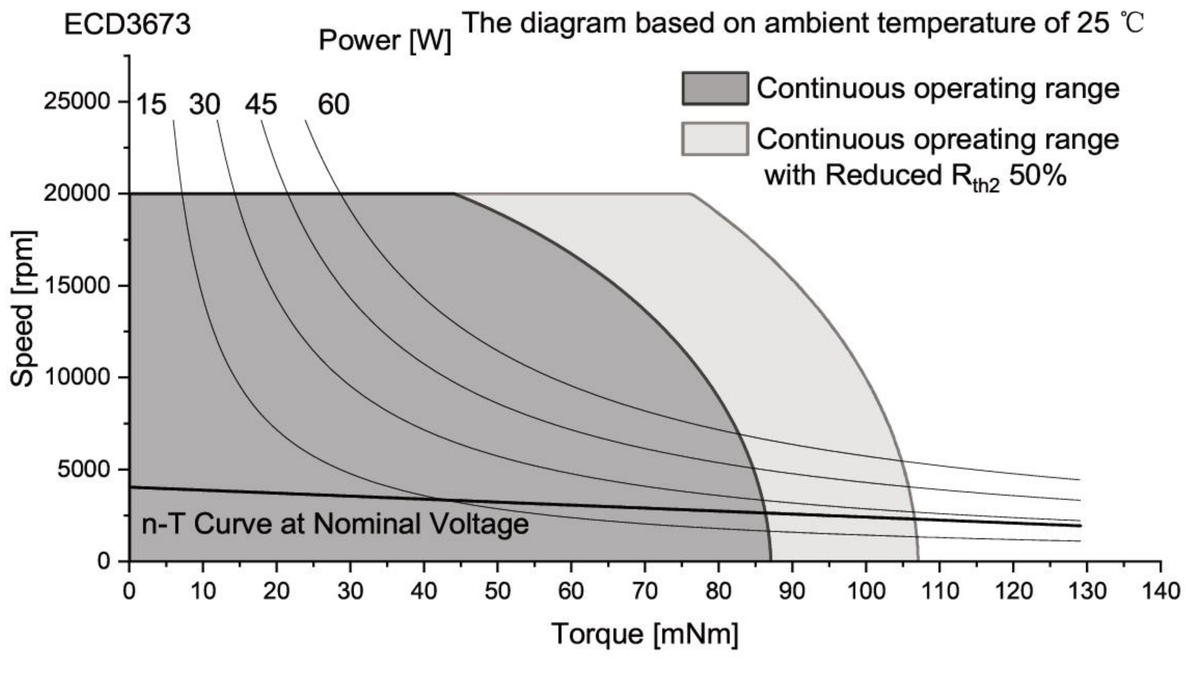

Controller features

Sensor, Open loop, Imax < 4A
Overload protection, Stall protection
Max. temperature of electronics +105℃

Connection

Conection		PTFE	
Pin 1	+VCC	AWG20	red
Pin 2	GND	AWG20	black

Caution:
Incorrect lead connection will damage the controller!

Configuration

Function: On&Off/Direction/Speed control/Brake
Speed closed&open-loop Control/Speed feedback
Performance: Customized in the continuous operating range
Ball bearing: Preload
Flange: Standard frange front&back/customize the frange
Shaft: Length/Diameter/Cut face
Leadwire: PVC/Silicon/Teflon/UL No/Dimension/length
Connector: JST/MOLEX/TE

More:
Please contact our sales engineers

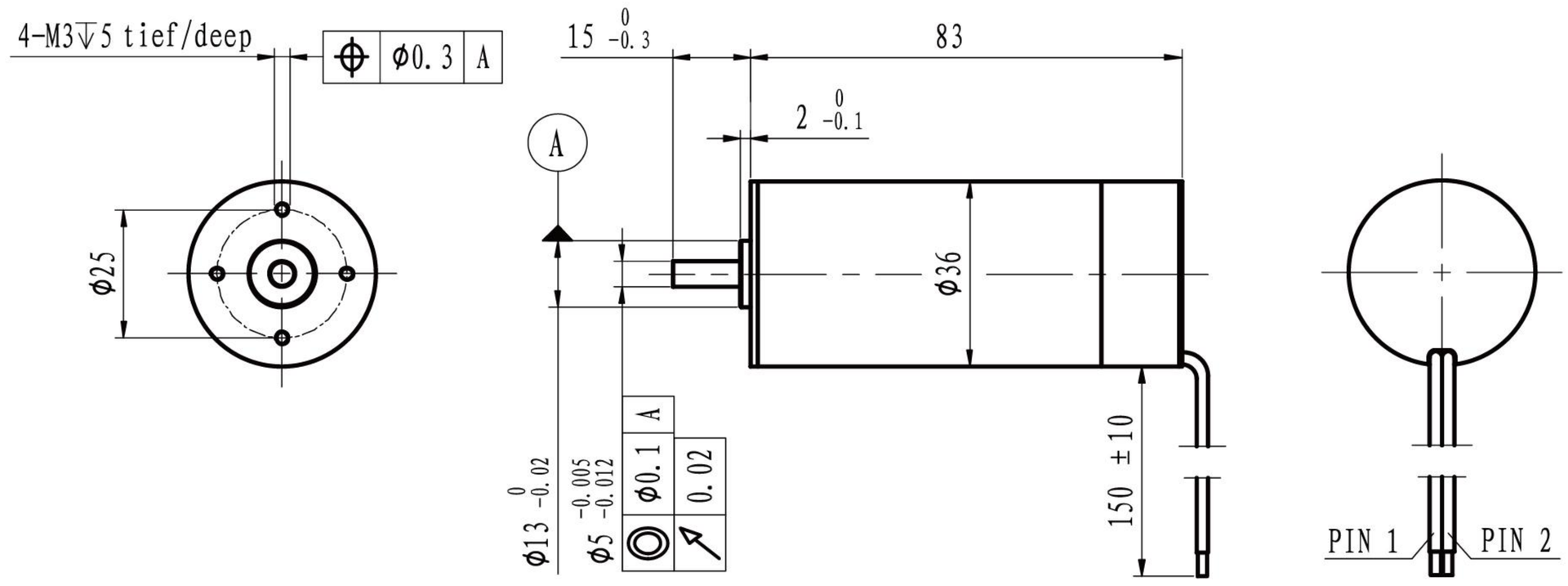

M 1:2

	With hall sensor	ECD3683S-…	1203	2403
Motor data				
Values at nominal voltage				
1	Nominal voltage	V	12	24
2	No load speed	rpm	3278	3273
3	No load current	mA	137	78
4	Nominal speed	rpm	2543	2546
5	Nominal torque	mNm	75	75
6	Nominal current	A	2.31	1.17
7	Stall torque	mNm	334.34	337.82
8	Stall current	A	9.84	4.98
9	Max. efficiency	%	77.8	76.5
10	Supply voltage +Vcc	V	10..28	10..28
11	Direction of ratation		CW	CW
12	Torque constant	mNm/A	34.47	68.93
13	Speed constant	rpm/V	277	139
14	Speed/torque gradient	rpm/mNm	10	10
15	Mechanical time constant	ms	2.2	2.2
16	Rotor inertia	gcm^2	21.5	21.5

17	Thermal resistance housing-ambient	5 K/W
18	Thermal resistance winding-housing	2.3 K/W
19	Thermal time constant winding	46 s
20	Thermal time constant motor	816 s
21	Ambient temprature	-30…+100℃
22	Max. permissible winding temperature	+150℃
23	Max. permissible speed	20000 rpm
24	Axial play at axial load <8 N	0 mm
	>8 N	max. 0.3 mm
25	Radial play	preloaded
26	Max. axial load (dynamic)	7.5 N
27	Max.force for press fits (static)	100 N
	(static, shaft supported)	2700 N
28	Max. radial loading, 5mm from flange	25 N
29	Number of pole pairs	1
30	Number of phases	3
31	Weight of motor	366 g

Operating Range

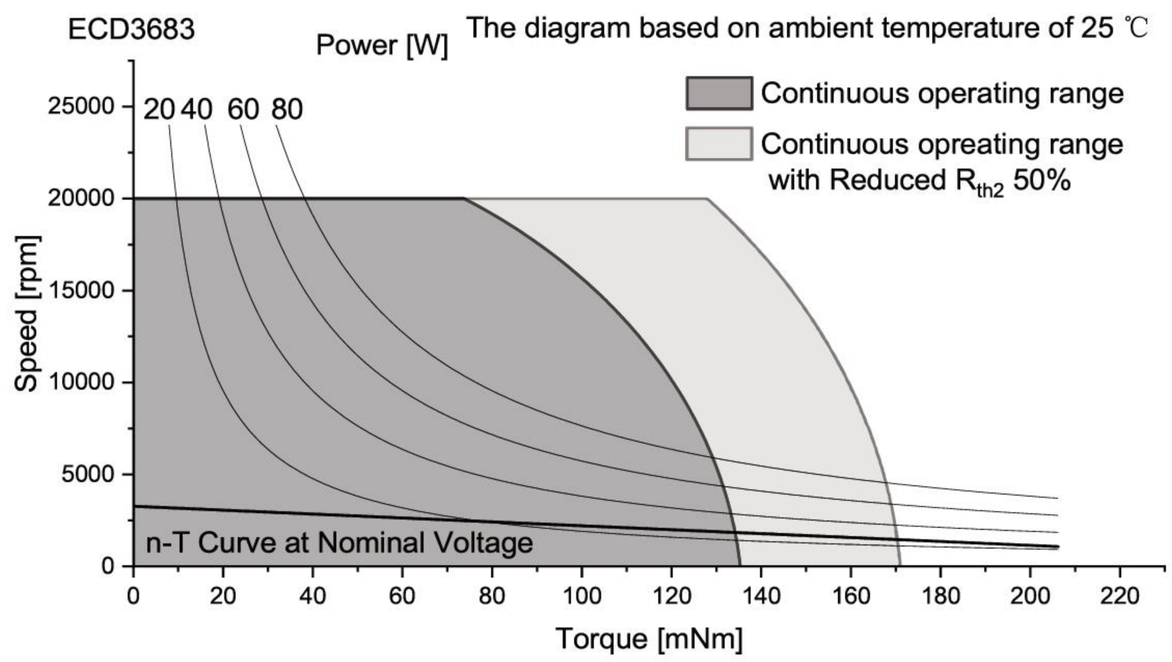

Controller features	
Sensor, Open loop, Imax < 4A	
Overload protection, Stall protection	
Max. temperature of electronics	+105℃

Connection

Conection

		PTFE	
Pin 1	+VCC	AWG20	red
Pin 2	GND	AWG20	black

Caution:
Incorrect lead connection will damage the controller!

Configuration

Function: On&Off/Direction/Speed control/Brake
Speed closed&open-loop Control/Speed feedback
Performance: Customized in the continuous operating range
Ball bearing: Preload
Flange: Standard frange front&back/customize the frange
Shaft: Length/Diameter/Cut face
Leadwire: PVC/Silicon/Teflon/UL No/Dimension/length
Connector: JST/MOLEX/TE

More:
Please contact our sales engineers

Subject: _____

Date: _____

ECH Series
High speed winding

Model	Dimension (mm)	Nominal Troque (mNm)	Nominal Speed (rpm)	Page
ECH1636	Φ16x36	5	35000	71
ECH1644	Φ16x44	7.5	25000	72
ECH1656	Φ16x56	6	40000	73
ECH2040	Φ20x40	6.5	35000	74
ECH2053	Φ20x53	10	45000	75
ECH2057	Φ20x57	12.5	45000	76
ECH2260	Φ22x60	15	35000	77

ECH Series

High speed winding

The high-speed coreless motor, with its unique ironless design and light weight rotor, excels in high rotational speed and low inertia.It enables rapid start, stop, and reversal, offering exceptional dynamic responsiveness. By minimizing eddy current and core losses, this motor achieves higher efficiency, especially at high speeds. Its low noise and vibration characteristics make it particularly suitable for applications requiring high stability.

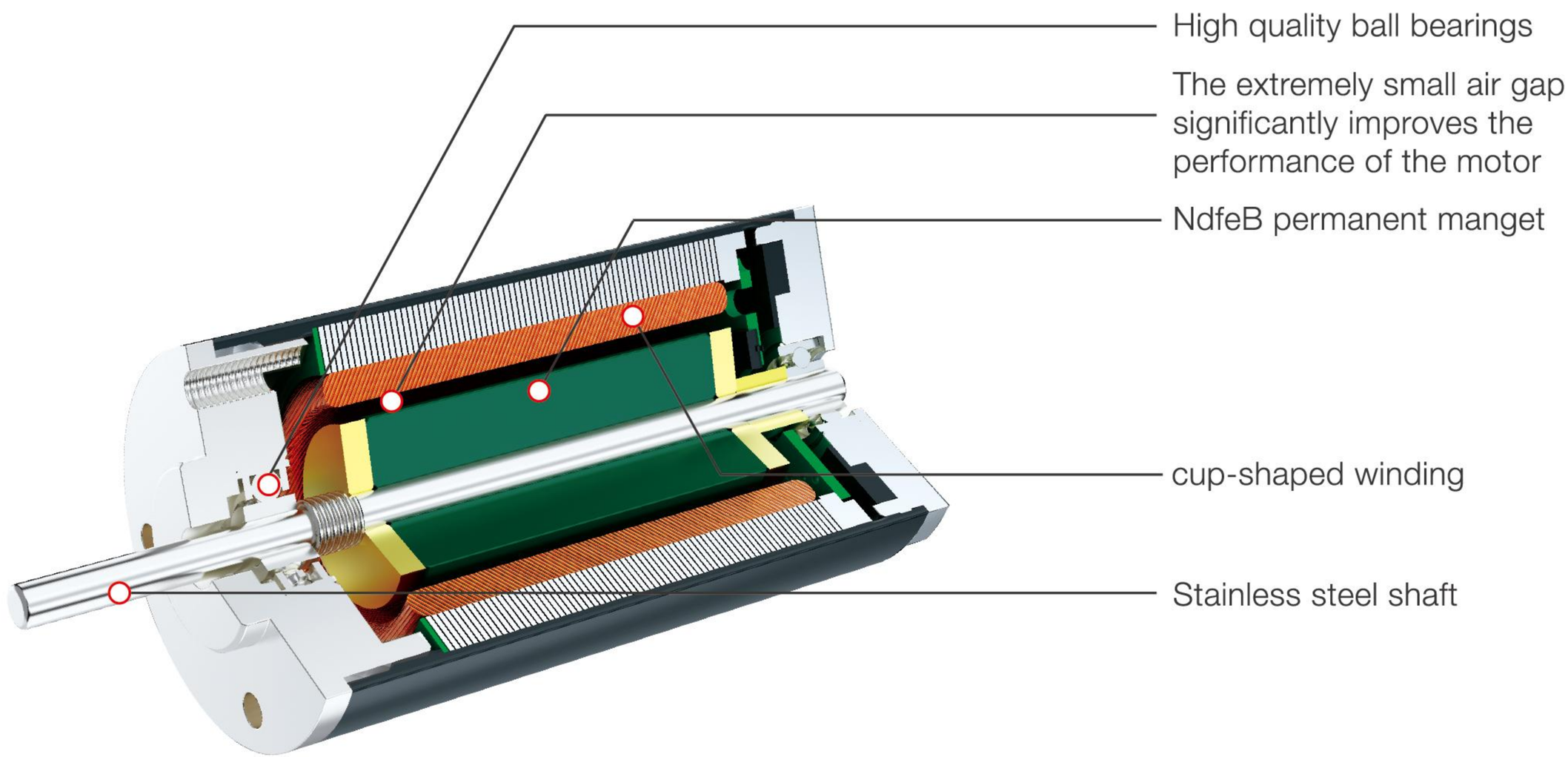

Basic Data:
Diameter: φ13mm-22mmm
Maximum Length: 60mm
Operate Voltage: 12V-48VDC
Maximum Permissiblespeed: 60,000rpm
Operate temperature: -30°C-+80°C

Typical features:
High efficienty
High Speed
Low noise
No Cogging
Low inductance
Good heat dissipation
Long operational lifetime

ECH series. Slotless Brushless DC Motor

ECH1636, Φ16mmX36mm

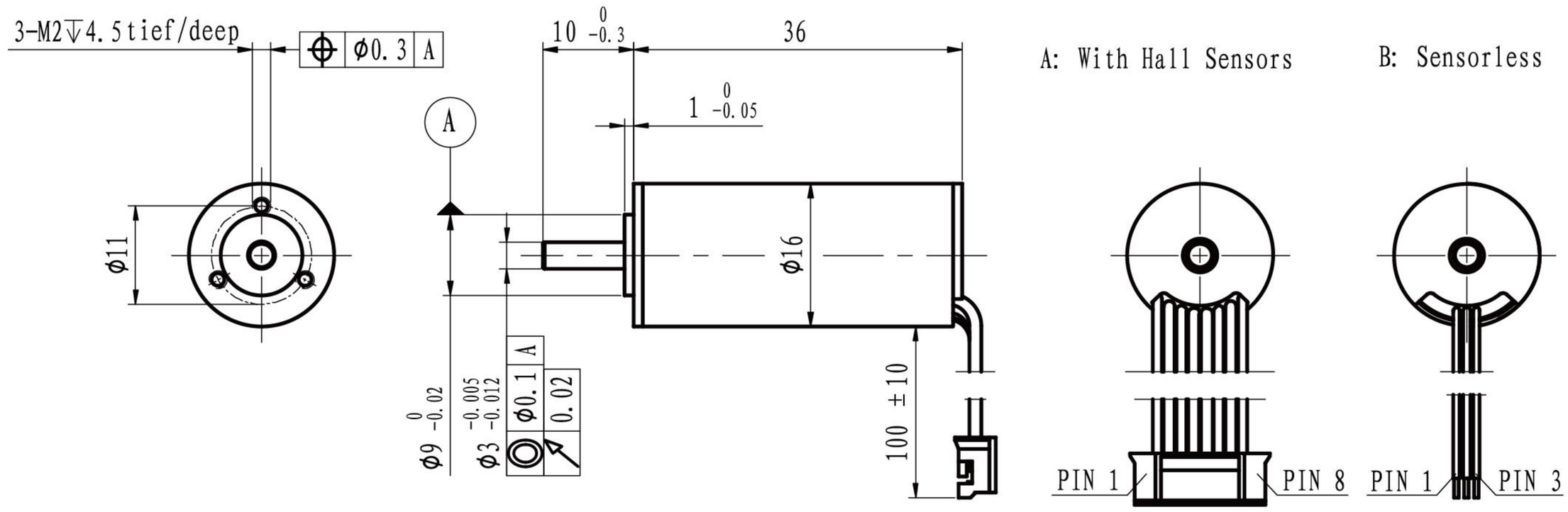

M 1:1

	Sensorless With hall sensor	ECH1636L-… ECH1636S-…	2440	3040	3640					
Motor data										
Values at nominal voltage										
1	Nominal voltage	V	24	30	36					
2	No load speed	rpm	40273	40225	40760					
3	No load current	mA	90	77	72					
4	Nominal speed	rpm	37067	36958	37406					
5	Nominal torque	mNm	5	5	5					
6	Nominal current	A	0.98	0.79	0.67					
7	Stall torque	mNm	62.80	61.56	60.76					
8	Stall current	A	11.21	8.80	7.35					
9	Max. efficiency	%	82.9	82.2	81.2					
10	Terminal resistance	Ω	2.14	3.41	4.9					
11	Terminal inductance	mH	0.11	0.17	0.33					
12	Torque constant	mNm/A	5.65	7.06	8.35					
13	Speed constant	rpm/V	1692	1353	1143					
14	Speed/torque gradient	rpm/mNm	641	653	671					
15	Mechanical time constant	ms	3.7	3.8	3.9					
16	Rotor inertia	gcm^2	0.55	0.55	0.55					

17	Thermal resistance housing-ambient	18.6 K/W
18	Thermal resistance winding-housing	3.44 K/W
19	Thermal time constant winding	6 s
20	Thermal time constant motor	298 s
21	Ambient temprature	-30…+100℃
22	Max. permissible winding temperature	+150℃
23	Max. permissible speed	80000 rpm
24	Axial play at axial load <3 N	0 mm
	>3 N	max. 0.3 mm
25	Radial play	preloaded
26	Max. axial load (dynamic)	2.5 N
27	Max.force for press fits (static)	44 N
	(static, shaft supported)	1200 N
28	Max. radial loading, 5mm from flange	11 N
29	Number of pole pairs	1
30	Number of phases	3
31	Weight of motor	32 g

Operating Range

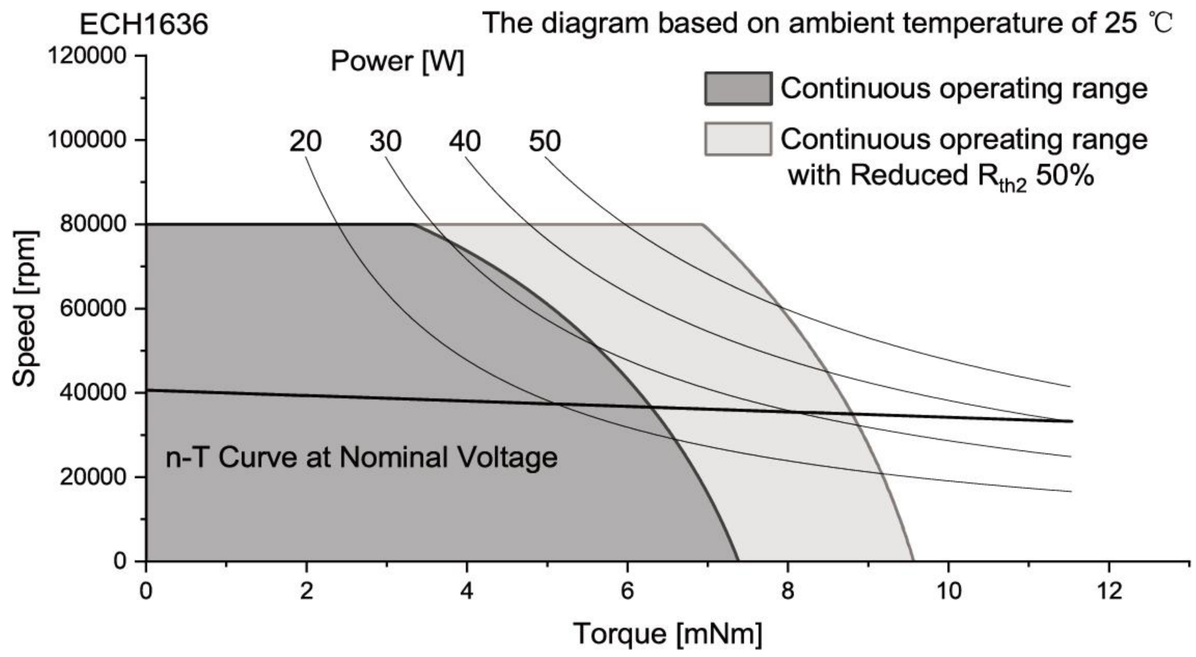

Connection

Conection A (Sensor)		PVC	
Pin 1	Vhall 3-18 VDC	AWG26	black
Pin 2	Hall sensor HA	AWG26	black
Pin 3	Hall sensor HB	AWG26	black
Pin 4	Hall sensor HC	AWG26	black
Pin 5	GND	AWG26	black
Pin 6	Motor winding MA	AWG26	black
Pin 7	Motor winding MB	AWG26	black
Pin 8	Motor winding MC	AWG26	black
Conector			
JST	PH2.0-8P		
Conection B (Sensorless)		PVC	
Pin 1	Motor winding MA	AWG26	yellow
Pin 2	Motor winding MB	AWG26	green
Pin 3	Motor winding MC	AWG26	blue

Configuration

Performance: Customized in the continuous operating range
Ball bearing: Preload
Flange: Standard frange front&back/customize the frange
Shaft: Length/Diameter/Cut face/double shaft/hollow shaft
Leadwire: PVC/Silicon/Teflon/UL No/Dimension/length
Connector: JST/MOLEX/TE

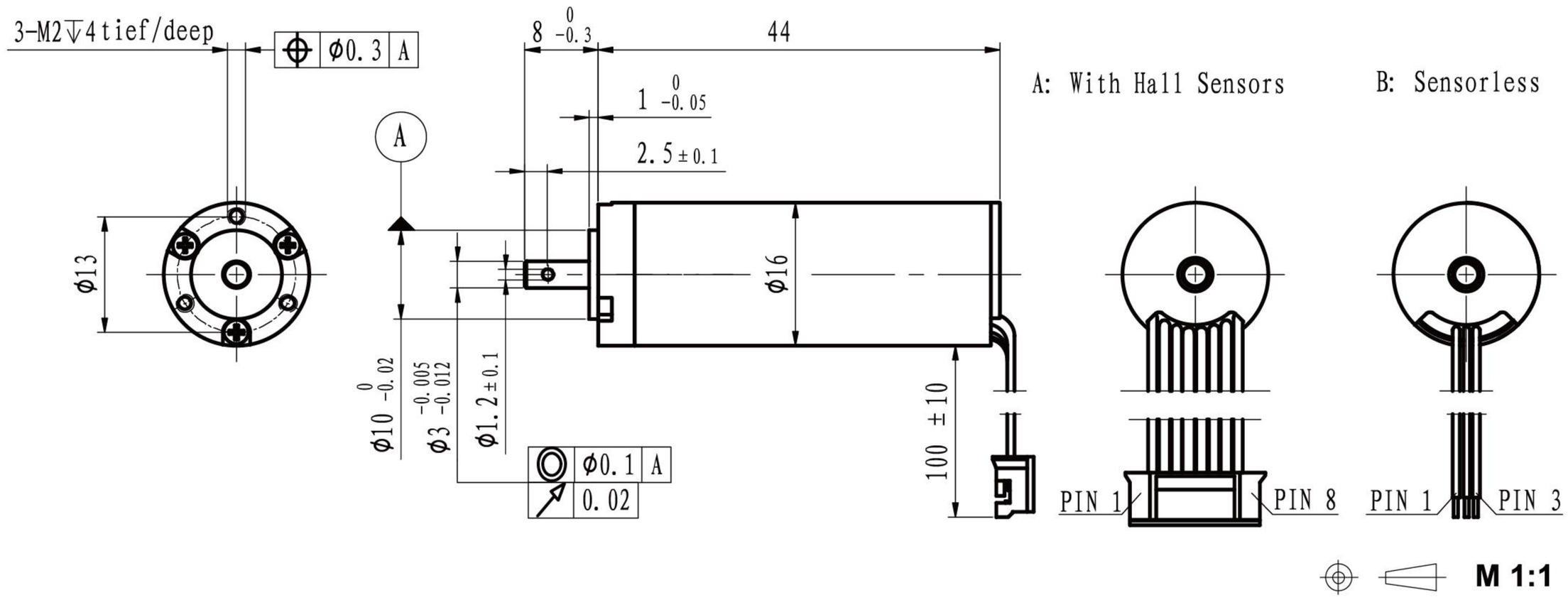

	Sensorless With hall sensor	ECH1644L-… ECH1644S-…	2430	3040	3640					
Motor data										
Values at nominal voltage										
1	Nominal voltage	V	24	30	36					
2	No load speed	rpm	30580	30900	30160					
3	No load current	mA	95	80	76					
4	Nominal speed	rpm	28134	28403	27632					
5	Nominal torque	mNm	7.5	7.5	7.5					
6	Nominal current	A	1.10	0.90	0.74					
7	Stall torque	mNm	93.75	92.81	89.46					
8	Stall current	A	12.70	10.17	8.00					
9	Max. efficiency	%	83.4	83.0	81.5					
10	Terminal resistance	Ω	1.89	2.95	4.5					
11	Terminal inductance	mH	0.12	0.19	0.28					
12	Torque constant	mNm/A	7.44	9.20	11.29					
13	Speed constant	rpm/V	1284	1038	846					
14	Speed/torque gradient	rpm/mNm	326	333	337					
15	Mechanical time constant	ms	2.8	2.9	2.9					
16	Rotor inertia	gcm^2	0.82	0.82	0.82					

17	Thermal resistance housing-ambient	16.2 K/W
18	Thermal resistance winding-housing	3.5 K/W
19	Thermal time constant winding	4 s
20	Thermal time constant motor	339 s
21	Ambient temprature	-30…+100℃
22	Max. permissible winding temperature	+150℃
23	Max. permissible speed	80000 rpm
24	Axial play at axial load <3 N	0 mm
	>3 N	max. 0.3 mm
25	Radial play	preloaded
26	Max. axial load (dynamic)	2.5 N
27	Max.force for press fits (static)	44 N
	(static, shaft supported)	1200 N
28	Max. radial loading, 5mm from flange	11 N
29	Number of pole pairs	1
30	Number of phases	3
31	Weight of motor	43g

Operating Range

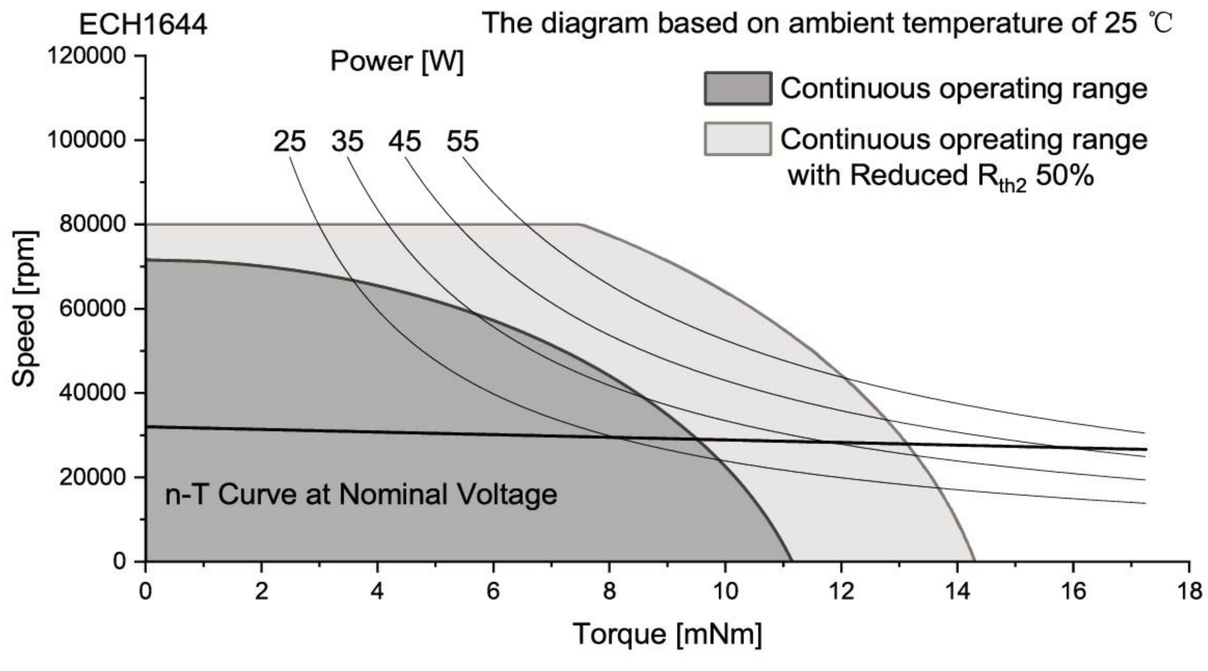

Connection

Conection A (Sensor)		PVC	
Pin 1	Vhall 3-18 VDC	AWG26	black
Pin 2	Hall sensor HA	AWG26	black
Pin 3	Hall sensor HB	AWG26	black
Pin 4	Hall sensor HC	AWG26	black
Pin 5	GND	AWG26	black
Pin 6	Motor winding MA	AWG26	black
Pin 7	Motor winding MB	AWG26	black
Pin 8	Motor winding MC	AWG26	black
Conector			
JST	PH2.0-8P		
Conection B (Sensorless)		PVC	
Pin 1	Motor winding MA	AWG26	yellow
Pin 2	Motor winding MB	AWG26	green
Pin 3	Motor winding MC	AWG26	blue

Configuration

Performance: Customized in the continuous operating range
Ball bearing: Preload
Flange: Standard frange front&back/customize the frange
Shaft: Length/Diameter/Cut face/double shaft/hollow shaft
Leadwire: PVC/Silicon/Teflon/UL No/Dimension/length
Connector: JST/MOLEX/TE

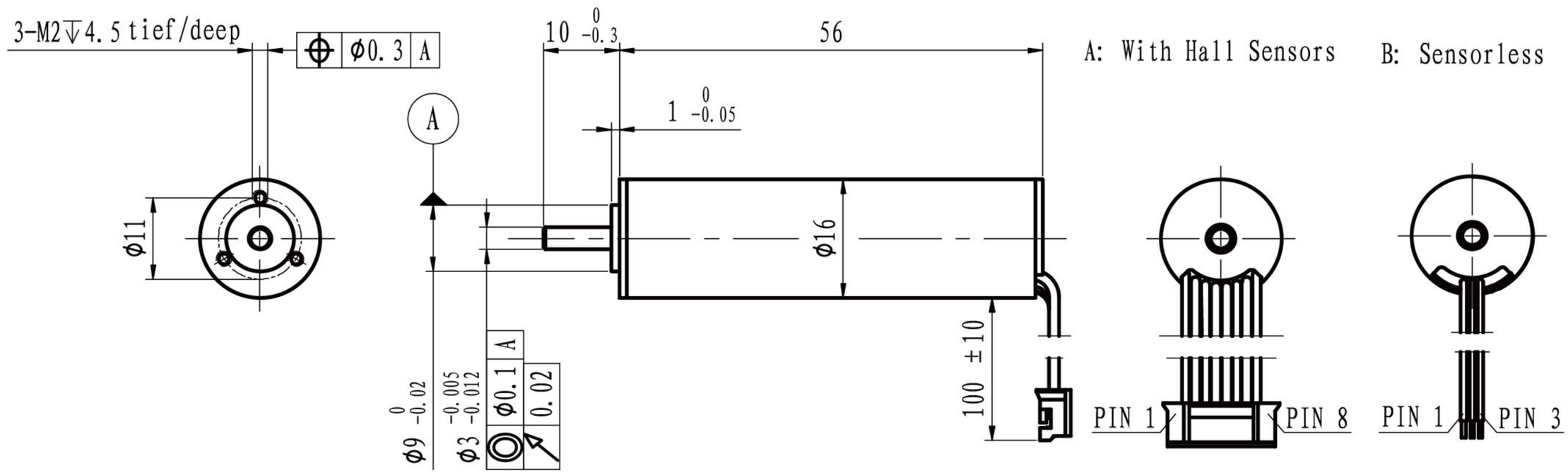

M 1:2

		Sensorless With hall sensor	ECH1656L-… ECH1656S-…	2440	3040	3640					
Motor data											
Values at nominal voltage											
1	Nominal voltage		V	24	30	36					
2	No load speed		rpm	41670	40775	41311					
3	No load current		mA	103	89	79					
4	Nominal speed		rpm	39238	38438	38898					
5	Nominal torque		mNm	6	6	6					
6	Nominal current		A	1.20	0.95	0.80					
7	Stall torque		mNm	102.81	104.67	102.71					
8	Stall current		A	18.90	15.08	12.50					
9	Max. efficiency		%	85.8	85.2	84.7					
10	Terminal resistance		Ω	1.27	1.99	2.88					
11	Terminal inductance		mH	0.09	0.14	0.2					
12	Torque constant		mNm/A	5.47	6.98	8.27					
13	Speed constant		rpm/V	1746	1367	1155					
14	Speed/torque gradient		rpm/mNm	405	390	402					
15	Mechanical time constant		ms	2.6	2.5	2.6					
16	Rotor inertia		gcm^2	0.61	0.61	0.61					

17	Thermal resistance housing-ambient		16.2 K/W
18	Thermal resistance winding-housing		1.9 K/W
19	Thermal time constant winding		5 s
20	Thermal time constant motor		397 s
21	Ambient temprature		-30…+100℃
22	Max. permissible winding temperature		+150℃
23	Max. permissible speed		80000 rpm
24	Axial play at axial load	<3 N	0 mm
		>3 N	max. 0.3 mm
25	Radial play		preloaded
26	Max. axial load (dynamic)		2.5 N
27	Max.force for press fits (static)		44 N
	(static, shaft supported)		1200 N
28	Max. radial loading, 5mm from flange		11 N
29	Number of pole pairs		1
30	Number of phases		3
31	Weight of motor		50 g

Operating Range

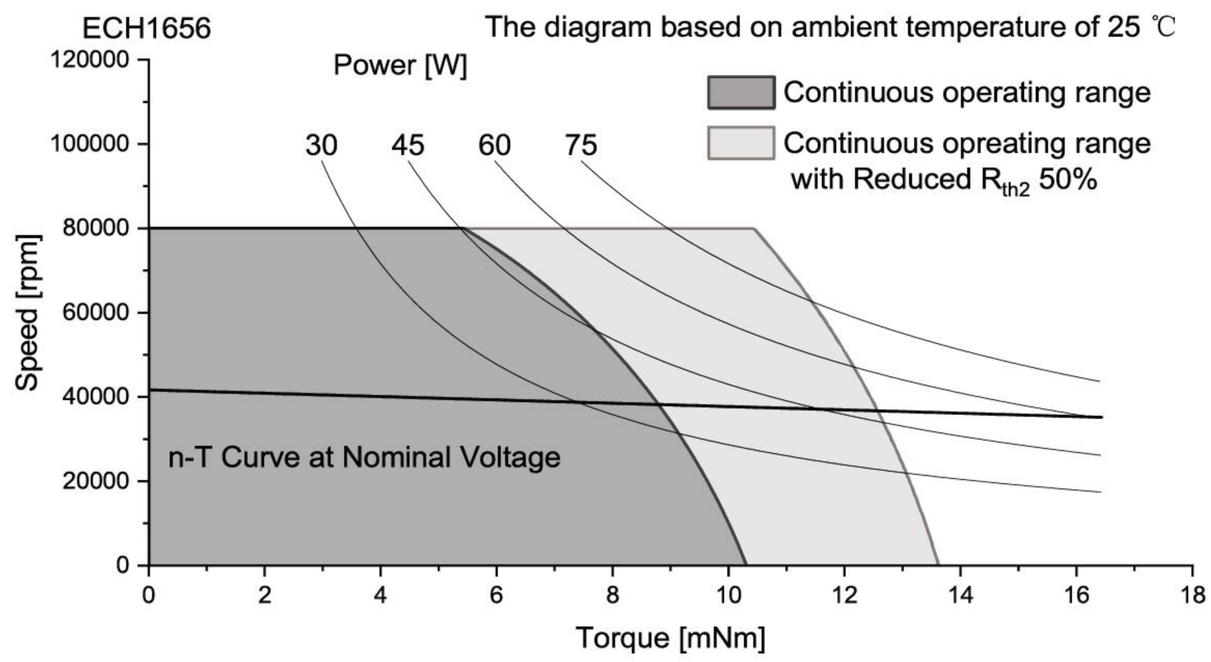

Connection

Conection A (Sensor)		PVC	
Pin 1	Vhall 3-18 VDC	AWG26	black
Pin 2	Hall sensor HA	AWG26	black
Pin 3	Hall sensor HB	AWG26	black
Pin 4	Hall sensor HC	AWG26	black
Pin 5	GND	AWG26	black
Pin 6	Motor winding MA	AWG26	black
Pin 7	Motor winding MB	AWG26	black
Pin 8	Motor winding MC	AWG26	black
Conector			
JST	PH2.0-8P		
Conection B (Sensorless)		PVC	
Pin 1	Motor winding MA	AWG26	yellow
Pin 2	Motor winding MB	AWG26	green
Pin 3	Motor winding MC	AWG26	blue

Configuration

Performance: Customized in the continuous operating range
Ball bearing: Preload
Flange: Standard frange front&back/customize the frange
Shaft: Length/Diameter/Cut face/double shaft/hollow shaft
Leadwire: PVC/Silicon/Teflon/UL No/Dimension/length
Connector: JST/MOLEX/TE

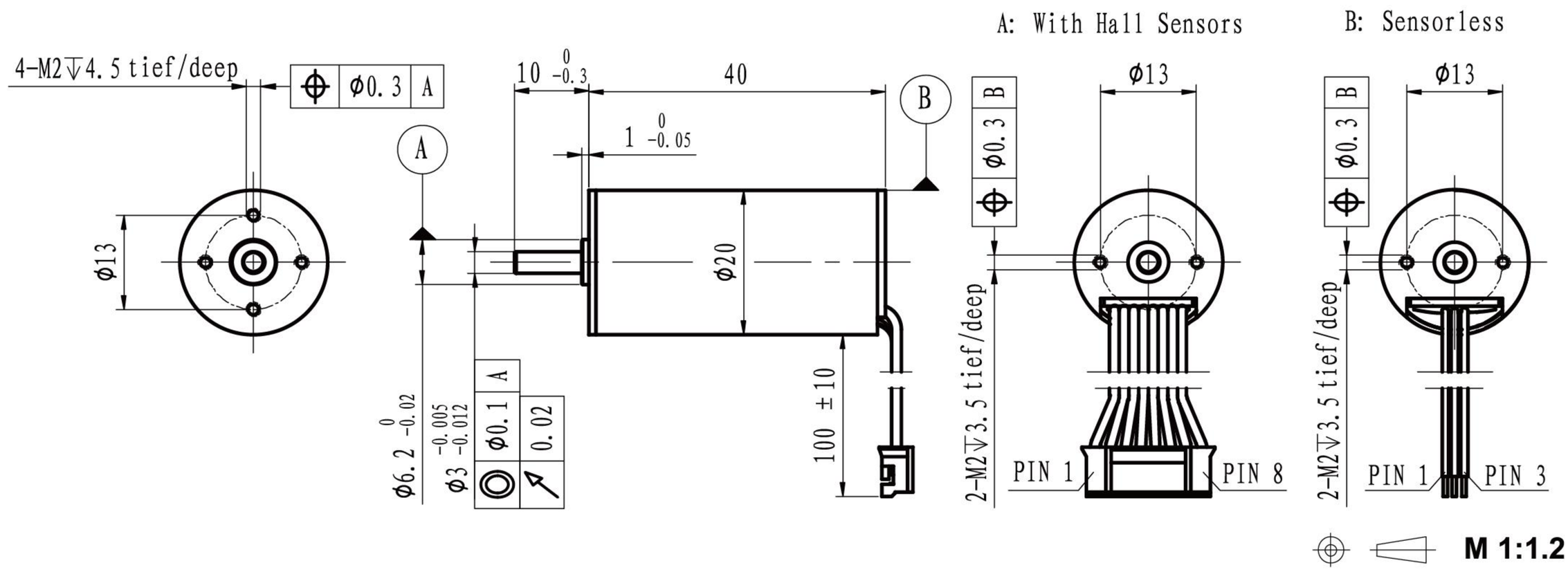

	Sensorless / With hall sensor	EC2040L-… / EC2040S-…	2440	3040	3640					
Motor data										
Values at nominal voltage										
1	Nominal voltage	V	24	30	36					
2	No load speed	rpm	41392	40700	40020					
3	No load current	mA	69	60	55					
4	Nominal speed	rpm	37502	36777	36049					
5	Nominal torque	mNm	6.3	6.3	6.3					
6	Nominal current	A	1.21	0.96	0.79					
7	Stall torque	mNm	67.04	65.35	63.48					
8	Stall current	A	12.24	9.40	7.50					
9	Max. efficiency	%	85.6	84.7	83.6					
10	Terminal resistance	Ω	1.96	3.19	4.8					
11	Terminal inductance	mH	0.21	0.47	0.47					
12	Torque constant	mNm/A	5.51	6.99	8.53					
13	Speed constant	rpm/V	1734	1365	1120					
14	Speed/torque gradient	rpm/mNm	617	623	630					
15	Mechanical time constant	ms	4.5	4.5	4.6					
16	Rotor inertia	gcm^2	0.69	0.69	0.69					

17	Thermal resistance housing-ambient	18.7 K/W
18	Thermal resistance winding-housing	1.9 K/W
19	Thermal time constant winding	5 s
20	Thermal time constant motor	397 s
21	Ambient temprature	-30…+100℃
22	Max. permissible winding temperature	+150℃
23	Max. permissible speed	80000 rpm
24	Axial play at axial load <3 N	0 mm
	>3 N	max. 0.3 mm
25	Radial play	preloaded
26	Max. axial load (dynamic)	2.5 N
27	Max.force for press fits (static)	44 N
	(static, shaft supported)	1200 N
28	Max. radial loading, 5mm from flange	11 N
29	Number of pole pairs	1
30	Number of phases	3
31	Weight of motor	53 g

Operating Range

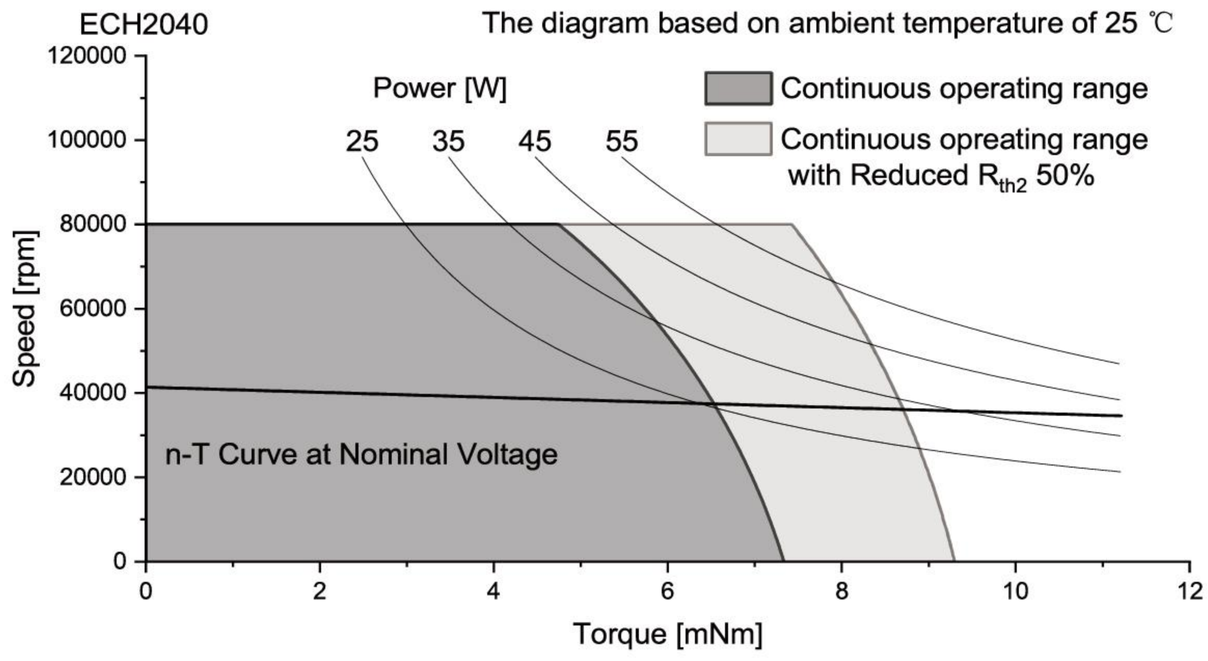

Connection

Conection A (Sensor)		PVC	
Pin 1	Vhall 3-18 VDC	AWG26	black
Pin 2	Hall sensor HA	AWG26	black
Pin 3	Hall sensor HB	AWG26	black
Pin 4	Hall sensor HC	AWG26	black
Pin 5	GND	AWG26	black
Pin 6	Motor winding MA	AWG26	black
Pin 7	Motor winding MB	AWG26	black
Pin 8	Motor winding MC	AWG26	black
Conector			
JST	PH2.0-8P		
Conection B (Sensorless)		PVC	
Pin 1	Motor winding MA	AWG26	yellow
Pin 2	Motor winding MB	AWG26	green
Pin 3	Motor winding MC	AWG26	blue

Configuration

Performance: Customized in the continuous operating range
Ball bearing: Preload
Flange: Standard frange front&back/customize the frange
Shaft: Length/Diameter/Cut face/double shaft/hollow shaft
Leadwire: PVC/Silicon/Teflon/UL No/Dimension/length
Connector: JST/MOLEX/TE

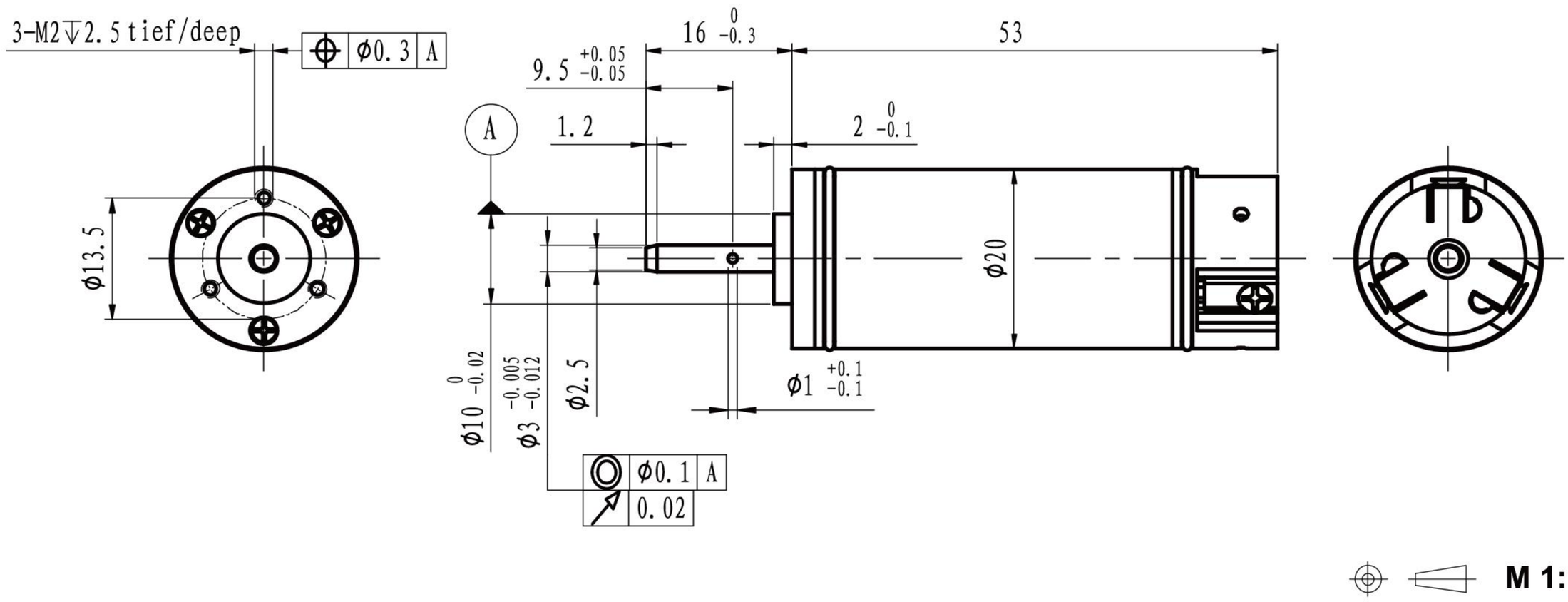

	Sensorless	EC2053L-…	1850	2450	3650	4850				
Motor data										
Values at nominal voltage										
1	Nominal voltage	V	18	24	36	48				
2	No load speed	rpm	50202	50832	51448	50700				
3	No load current	mA	136	107	81	68				
4	Nominal speed	rpm	45684	46379	46936	46188				
5	Nominal torque	mNm	10	10	10	10				
6	Nominal current	A	3.07	2.33	1.58	1.18				
7	Stall torque	mNm	111.13	114.15	114.02	112.37				
8	Stall current	A	32.73	25.53	17.22	12.57				
9	Max. efficiency	%	87.5	87.5	86.8	85.8				
10	Terminal resistance	Ω	0.55	0.94	2.09	3.82				
11	Terminal inductance	mH	0.06	0.1	0.23	0.38				
12	Torque constant	mNm/A	3.41	4.49	6.65	8.99				
13	Speed constant	rpm/V	2801	2127	1436	1062				
14	Speed/torque gradient	rpm/mNm	452	445	451	451				
15	Mechanical time constant	ms	3.9	3.9	3.9	3.9				
16	Rotor inertia	gcm^2	0.83	0.83	0.83	0.83				

17	Thermal resistance housing-ambient	11.8 K/W
18	Thermal resistance winding-housing	0.8 K/W
19	Thermal time constant winding	2 s
20	Thermal time constant motor	386 s
21	Ambient temprature	-30…+100℃
22	Max. permissible winding temperature	+150℃
23	Max. permissible speed	80000 rpm
24	Axial play at axial load <3 N	0 mm
	>3 N	max. 0.3 mm
25	Radial play	preloaded
26	Max. axial load (dynamic)	2.5 N
27	Max.force for press fits (static)	44 N
	(static, shaft supported)	1200 N
28	Max. radial loading, 5mm from flange	11 N
29	Number of pole pairs	1
30	Number of phases	3
31	Weight of motor	63 g

Operating Range

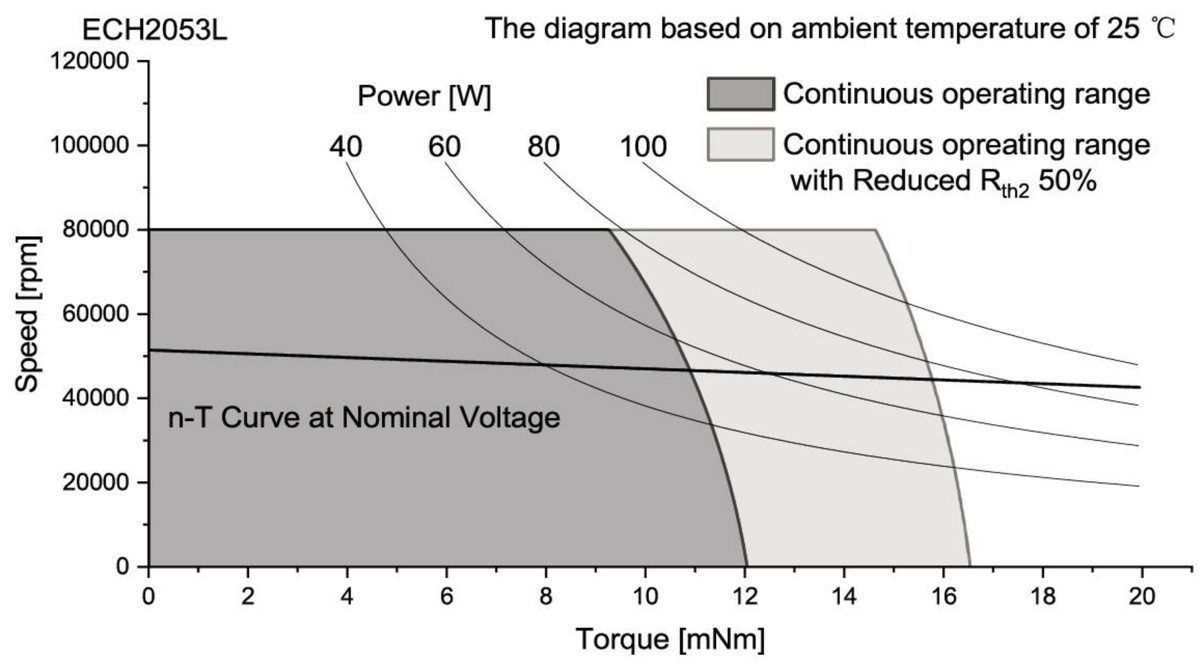

Connection

Conection

specical connector
please contact sales engineer

Configuration

Performance: Customized in the continuous operating range
Ball bearing: Preload
Flange: Standard frange front&back/customize the frange
Shaft: Length/Diameter/Cut face/double shaft/hollow shaft
Leadwire: PVC/Silicon/Teflon/UL No/Dimension/length
Connector: JST/MOLEX/TE

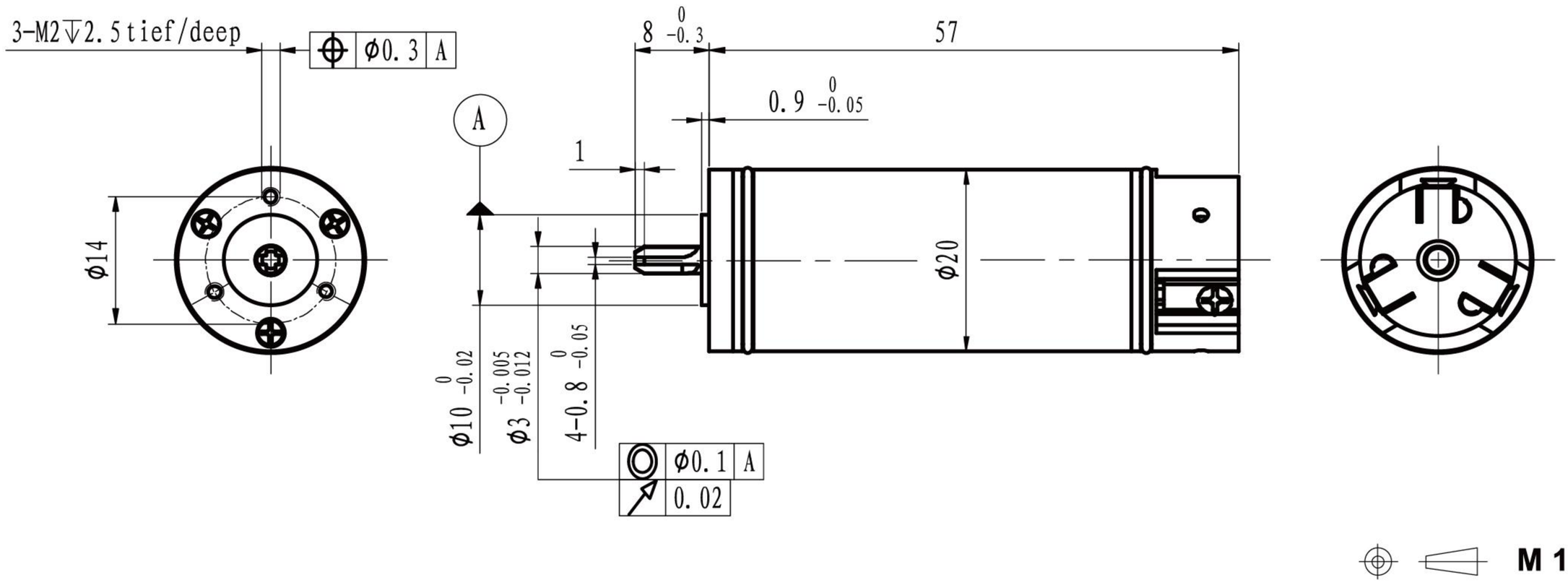

	Sensorless	EC2057L-…	1850	2450	3650	4850				
Motor data										
Values at nominal voltage										
1	Nominal voltage	V	18	24	36	48				
2	No load speed	rpm	50202	50832	51286	50700				
3	No load current	mA	210	158	113	94				
4	Nominal speed	rpm	46263	46714	47334	46436				
5	Nominal torque	mNm	15	15	15	15				
6	Nominal current	A	4.61	3.50	2.36	1.76				
7	Stall torque	mNm	191.16	185.14	194.68	178.37				
8	Stall current	A	56.25	41.38	29.27	19.92				
9	Max. efficiency	%	88.2	88.0	88.0	86.7				
10	Terminal resistance	Ω	0.32	0.58	1.23	2.41				
11	Terminal inductance	mH	0.04	0.06	0.14	0.25				
12	Torque constant	mNm/A	3.41	4.49	6.68	9.00				
13	Speed constant	rpm/V	2799	2126	1430	1061				
14	Speed/torque gradient	rpm/mNm	263	275	263	284				
15	Mechanical time constant	ms	2.5	2.6	2.5	2.7				
16	Rotor inertia	gcm^2	0.91	0.91	0.91	0.91				

17	Thermal resistance housing-ambient	7.6 K/W
18	Thermal resistance winding-housing	1.6 K/W
19	Thermal time constant winding	5 s
20	Thermal time constant motor	410 s
21	Ambient temprature	-30…+100℃
22	Max. permissible winding temperature	+150℃
23	Max. permissible speed	80000 rpm
24	Axial play at axial load <3 N	0 mm
	>3 N	max. 0.3 mm
25	Radial play	preloaded
26	Max. axial load (dynamic)	2.5 N
27	Max.force for press fits (static)	44 N
	(static, shaft supported)	1200 N
28	Max. radial loading, 5mm from flange	11 N
29	Number of pole pairs	1
30	Number of phases	3
31	Weight of motor	69 g

Operating Range

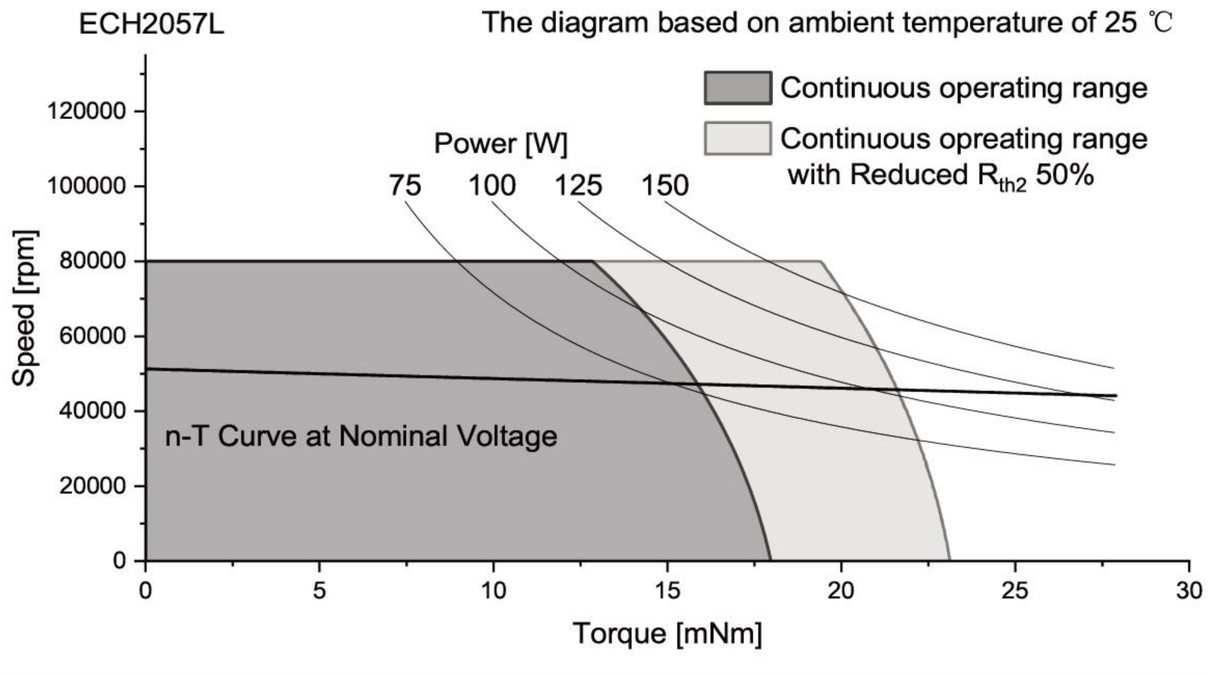

Connection

Conection
specical connector
please contact sales engineer

Configuration

Performance: Customized in the continuous operating range
Ball bearing: Preload
Flange: Standard frange front&back/customize the frange
Shaft: Length/Diameter/Cut face/double shaft/hollow shaft
Leadwire: PVC/Silicon/Teflon/UL No/Dimension/length
Connector: JST/MOLEX/TE

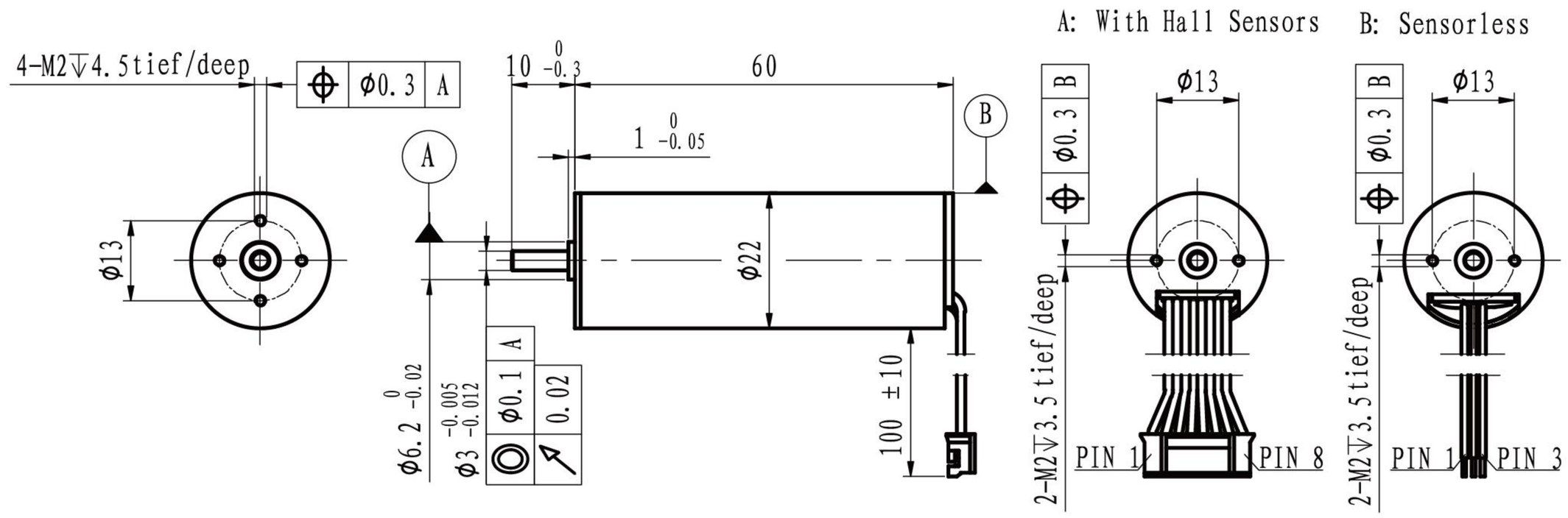

M 1:1.5

	Sensorless With hall sensor	EC2260L-… EC2260S-…	2440	3640						
Motor data										
Values at nominal voltage										
1	Nominal voltage	V	24	36						
2	No load speed	rpm	41423	40020						
3	No load current	mA	100	65						
4	Nominal speed	rpm	36276	35320						
5	Nominal torque	mNm	15	15						
6	Nominal current	A	2.82	1.82						
7	Stall torque	mNm	120.72	127.74						
8	Stall current	A	22.02	15.00						
9	Max. efficiency	%	87.0	87.3						
10	Terminal resistance	Ω	1.09	2.4						
11	Terminal inductance	mH	0.17	0.39						
12	Torque constant	mNm/A	5.51	8.55						
13	Speed constant	rpm/V	1734	1117						
14	Speed/torque gradient	rpm/mNm	343	313						
15	Mechanical time constant	ms	2.6	2.3						
16	Rotor inertia	gcm^2	0.71	0.71						

17	Thermal resistance housing-ambient		9.6 K/W
18	Thermal resistance winding-housing		2.5 K/W
19	Thermal time constant winding		14 s
20	Thermal time constant motor		448 s
21	Ambient temprature		-30…+100℃
22	Max. permissible winding temperature		+150℃
23	Max. permissible speed		80000 rpm
24	Axial play at axial load	<3 N	0 mm
		>3 N	max. 0.3 mm
25	Radial play		preloaded
26	Max. axial load (dynamic)		2.5 N
27	Max.force for press fits (static)		44 N
	(static, shaft supported)		1200 N
28	Max. radial loading, 5mm from flange		11 N
29	Number of pole pairs		1
30	Number of phases		3
31	Weight of motor		92 g

Operating Range

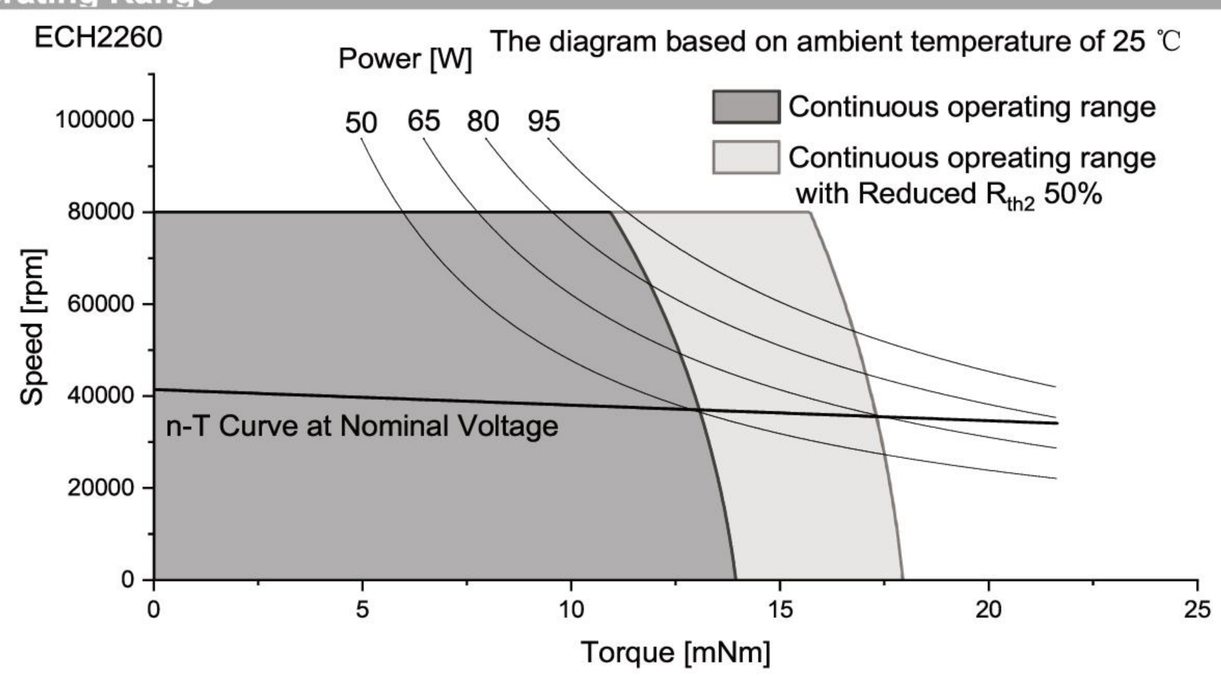

Connection

Conection A (Sensor)		PVC	
Pin 1	Vhall 3-18 VDC	AWG26	black
Pin 2	Hall sensor HA	AWG26	black
Pin 3	Hall sensor HB	AWG26	black
Pin 4	Hall sensor HC	AWG26	black
Pin 5	GND	AWG26	black
Pin 6	Motor winding MA	AWG26	black
Pin 7	Motor winding MB	AWG26	black
Pin 8	Motor winding MC	AWG26	black
Conector			
JST	PH2.0-8P		
Conection B (Sensorless)		PVC	
Pin 1	Motor winding MA	AWG26	yellow
Pin 2	Motor winding MB	AWG26	green
Pin 3	Motor winding MC	AWG26	blue

Configuration

Performance: Customized in the continuous operating range
Ball bearing: Preload
Flange: Standard frange front&back/customize the frange
Shaft: Length/Diameter/Cut face/double shaft/hollow shaft
Leadwire: PVC/Silicon/Teflon/UL No/Dimension/length
Connector: JST/MOLEX/TE

Slotted

Brushless DC motors

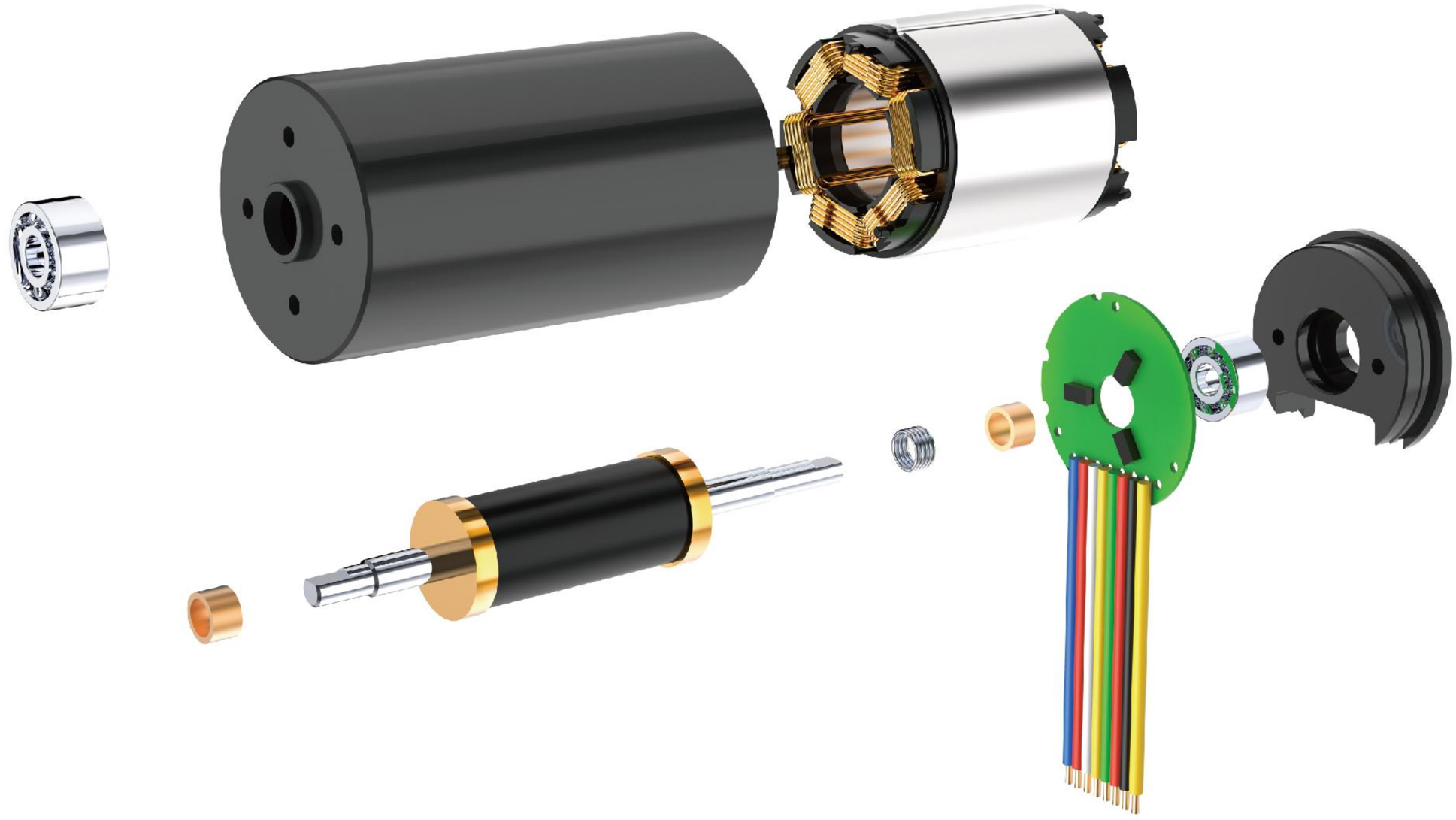

Contents

BL SERIES	Inner running structure	P. 79-84
BD SERIES	Electronics integrated	P. 85-100
BF SERIES	Outter running structure	P. 101-109
ECI SERIES	Multipole internal rotor design	P. 111-115

SLOTTED BLDC MOTOR

BL Series

Inner running structure

Model	Dimension (mm)	Nominal Troque (mNm)	Nominal Speed (rpm)	Page
BL1632	Φ16x32	7	8000	81
BL2240	Φ22x40	12	9000	82
BL2847	Φ28x47	20	12000	83
BL3657	Φ36x57	40	12000	84

In fact, based on the technology of slotted brushless DC motors, we can provide a completely customized service for different applications and requirements, which can be a completely new product design or a replacement of the original model.

SLOTTED BLDC MOTOR

BL Series

The slotted structure design concentrates the magnetic field, improving efficiency and torque density, allowing the motor to achieve greater output in a smaller volume. The structure is rugged and able to withstand high mechanical stress, making it suitable for operation in harsh environments. Good heat dissipation is another advantage, and the slotted structure can effectively dissipate heat, reduce the risk of overheating, and improve the reliability of the motor. In addition, this motor is very precise in speed control, which is suitable for applications that require high-precision control.

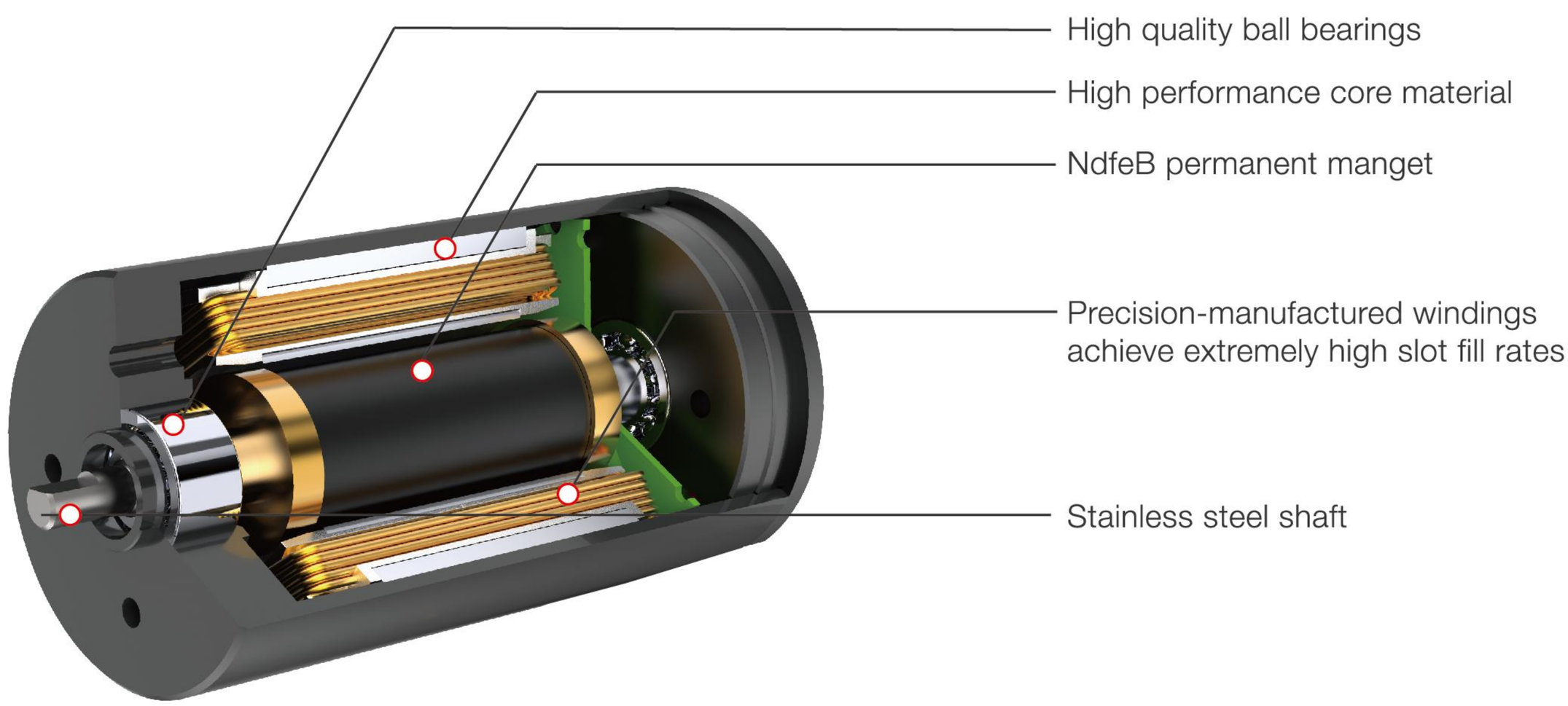

Basic Data:
Diameter: φ16mm-36mmm
Maximum Length: 57mm
Operate Voltage: 12V-48VDC
Maximum Permissiblespeed: 20,000rpm
Operate temperature: -30°C-+80°C

Typical features:
Cost effective
Large starting torque
Low noise
Good heat dissipation
Long operational lifetime
Customizable

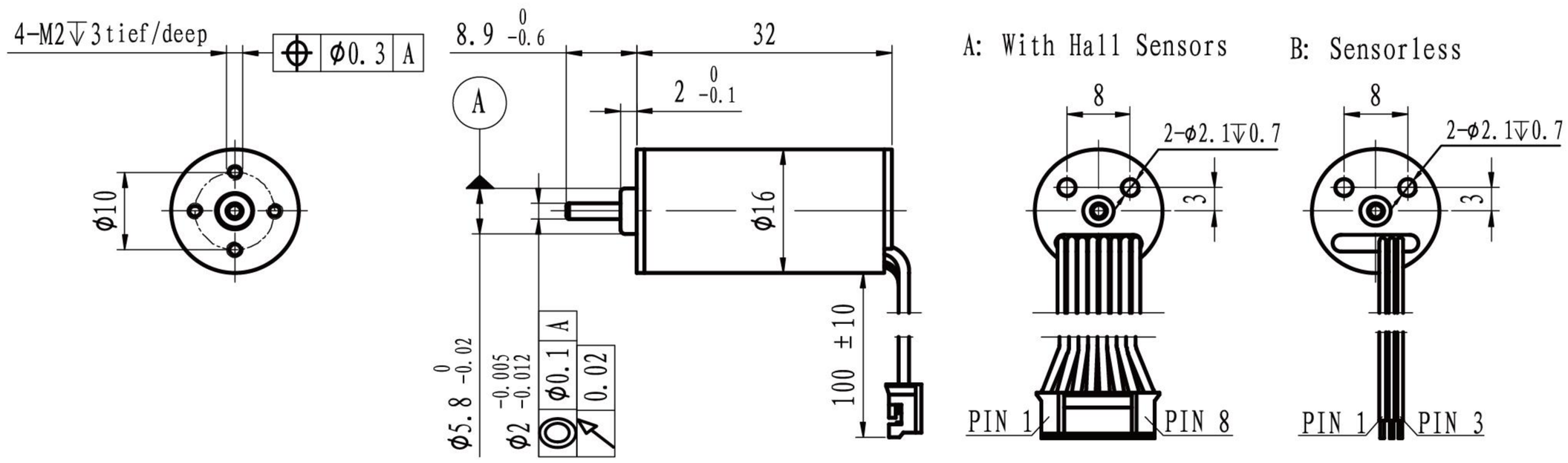

M 1:1.2

	Sensorless / With hall sensor	BL1632L-… / BL1632S-…	1210	2410
Motor data				
Values at nominal voltage				
1	Nominal voltage	V	12	24
2	No load speed	rpm	10233	10457
3	No load current	mA	140	90
4	Nominal speed	rpm	8142	8424
5	Nominal torque	mNm	7	7
6	Nominal current	A	0.79	0.43
7	Stall torque	mNm	34.26	36.00
8	Stall current	A	3.33	1.82
9	Max. efficiency	%	63.2	60.5
10	Terminal resistance	Ω	3.6	13.2
11	Terminal inductance	mH	0.39	1.52
12	Torque constant	mNm/A	10.73	20.83
13	Speed constant	rpm/V	890	458
14	Speed/torque gradient	rpm/mNm	299	290
15	Mechanical time constant	ms	1.4	1.4
16	Rotor inertia	gcm^2	0.46	0.46

17	Thermal resistance housing-ambient		20.7 K/W
18	Thermal resistance winding-housing		10.5 K/W
19	Thermal time constant winding		8 s
20	Thermal time constant motor		268 s
21	Ambient temprature		-30…+100℃
22	Max. permissible winding temperature		+150℃
23	Max. permissible speed		25000 rpm
24	Axial play at axial load	<1.8 N	0 mm
		>1.8 N	max. 0.3 mm
25	Radial play		preloaded
26	Max. axial load (dynamic)		1.3 N
27	Max.force for press fits (static)		15 N
	(static, shaft supported)		350 N
28	Max. radial loading, 5mm from flange		5 N
29	Number of pole pairs		2
30	Number of phases		3
31	Weight of motor		25 g

Operating Range

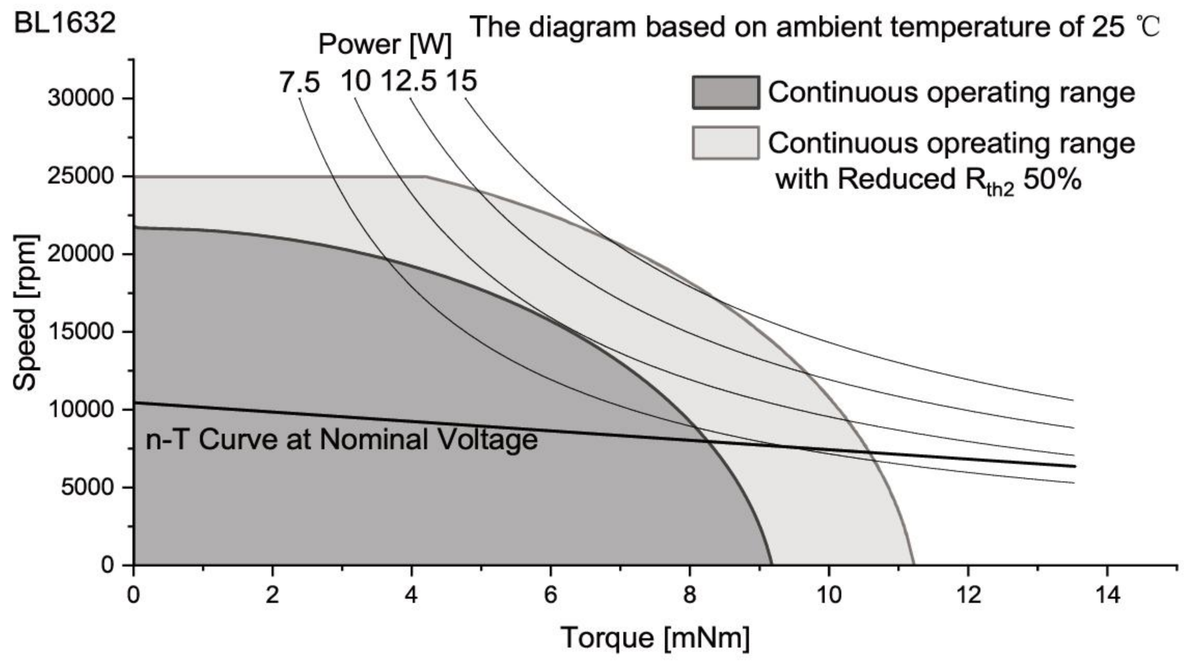

Connection

Conection A (Sensor)		PTFE	
Pin 1	Vhall 3-18 VDC	AWG30	black
Pin 2	Hall sensor HA	AWG30	black
Pin 3	Hall sensor HB	AWG30	black
Pin 4	Hall sensor HC	AWG30	black
Pin 5	GND	AWG30	black
Pin 6	Motor winding MA	AWG30	black
Pin 7	Motor winding MB	AWG30	black
Pin 8	Motor winding MC	AWG30	black
Conector			
JST	PH2.0-8P		
Conection B (Sensorless)		PVC	
Pin 1	Motor winding MA	AWG26	yellow
Pin 2	Motor winding MB	AWG26	green
Pin 3	Motor winding MC	AWG26	blue

Configuration

Performance: Customized in the continuous operating range
Ball bearing: Preload
Flange: Standard frange front&back/customize the frange
Shaft: Length/Diameter/Cut face/double shaft/hollow shaft
Leadwire: PVC/Silicon/Teflon/UL No/Dimension/length
Connector: JST/MOLEX/TE

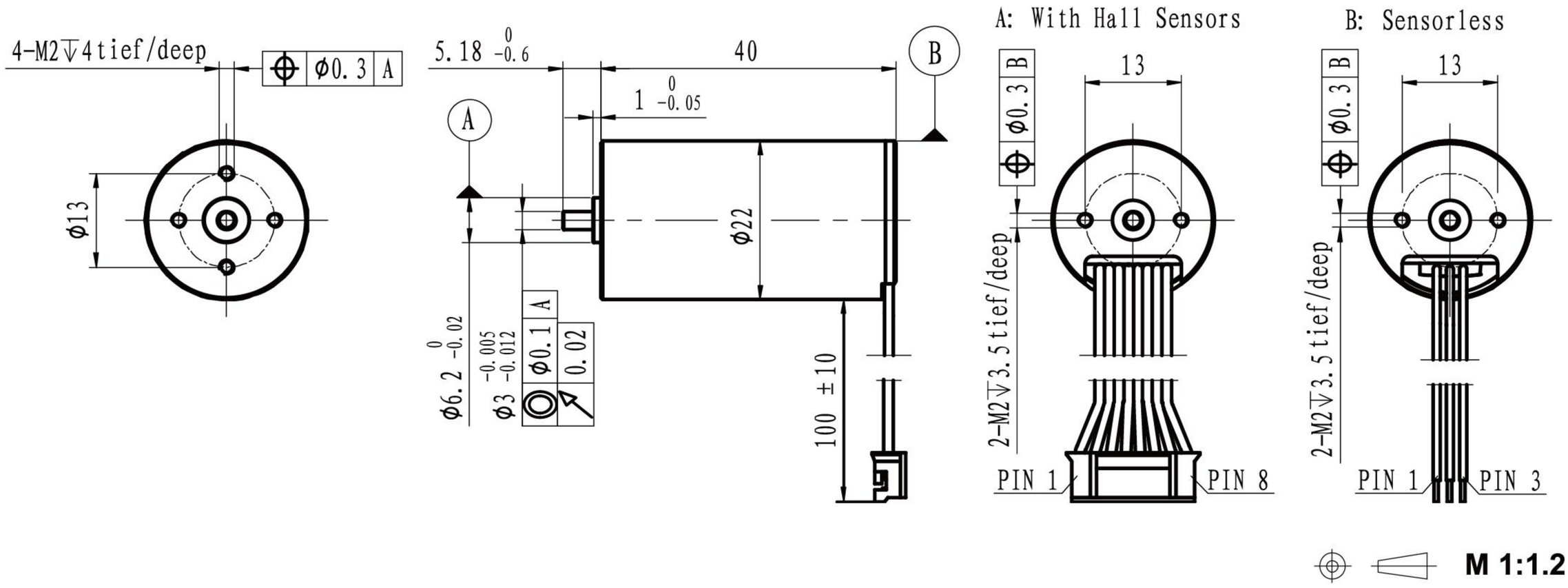

	Sensorless With hall sensor	BL2240L-… BL2240S-…	1210	2410						
Motor data										
Values at nominal voltage										
1	Nominal voltage	V	12	24						
2	No load speed	rpm	10339	10720						
3	No load current	mA	193	110						
4	Nominal speed	rpm	8652	9028						
5	Nominal torque	mNm	12	12						
6	Nominal current	A	1.31	0.69						
7	Stall torque	mNm	73.56	76.04						
8	Stall current	A	7.02	3.77						
9	Max. efficiency	%	69.6	68.8						
10	Terminal resistance	Ω	1.71	6.36						
11	Terminal inductance	mH	0.24	0.96						
12	Torque constant	mNm/A	10.78	20.76						
13	Speed constant	rpm/V	886	460						
14	Speed/torque gradient	rpm/mNm	141	141						
15	Mechanical time constant	ms	1.9	1.9						
16	Rotor inertia	gcm^2	1.26	1.26						

17	Thermal resistance housing-ambient	15.1 K/W
18	Thermal resistance winding-housing	9.0 K/W
19	Thermal time constant winding	18 s
20	Thermal time constant motor	496 s
21	Ambient temprature	-30…+100℃
22	Max. permissible winding temperature	+150℃
23	Max. permissible speed	25000 rpm
24	Axial play at axial load <4 N	0 mm
	>4 N	max. 0.3 mm
25	Radial play	preloaded
26	Max. axial load (dynamic)	3.5 N
27	Max.force for press fits (static)	44 N
	(static, shaft supported)	1200 N
28	Max. radial loading, 5mm from flange	15 N
29	Number of pole pairs	1
30	Number of phases	3
31	Weight of motor	64 g

Operating Range

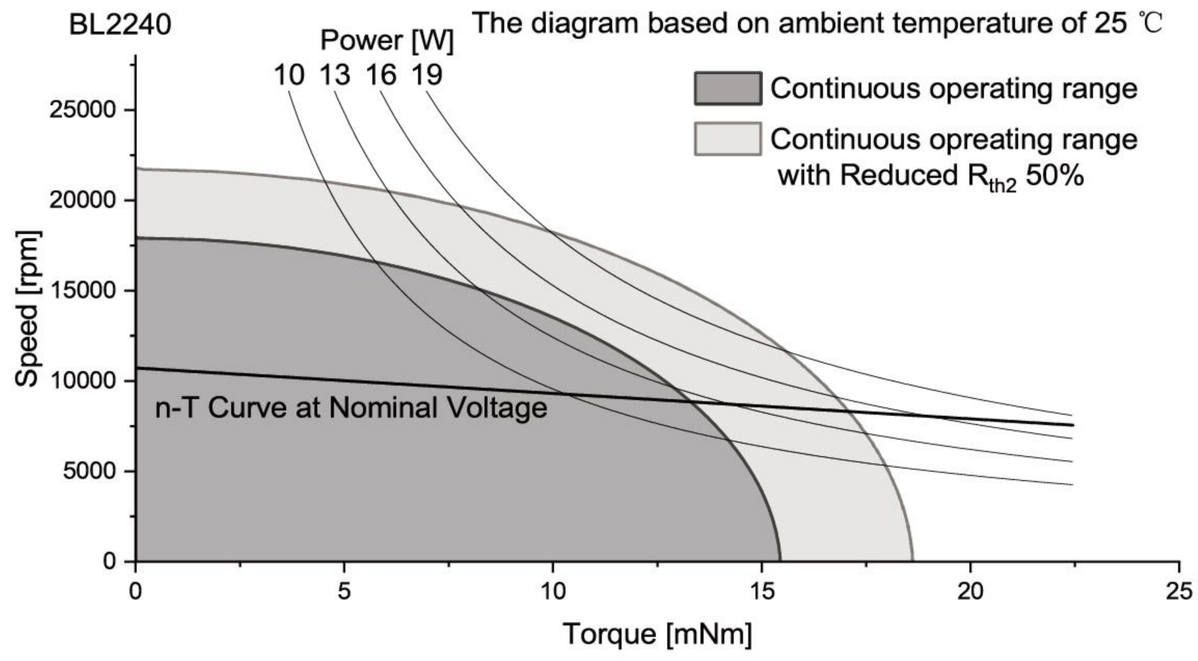

Connection

Conection A (Sensor)		PVC	
Pin 1	Vhall 3-18 VDC	AWG26	black
Pin 2	Hall sensor HA	AWG26	black
Pin 3	Hall sensor HB	AWG26	black
Pin 4	Hall sensor HC	AWG26	black
Pin 5	GND	AWG26	black
Pin 6	Motor winding MA	AWG26	black
Pin 7	Motor winding MB	AWG26	black
Pin 8	Motor winding MC	AWG26	black
Conector			
JST	PH2.0-8P		
Conection B (Sensorless)		PVC	
Pin 1	Motor winding MA	AWG26	yellow
Pin 2	Motor winding MB	AWG26	green
Pin 3	Motor winding MC	AWG26	blue

Configuration

Performance: Customized in the continuous operating range
Ball bearing: Preload
Flange: Standard frange front&back/customize the frange
Shaft: Length/Diameter/Cut face/double shaft/hollow shaft
Leadwire: PVC/Silicon/Teflon/UL No/Dimension/length
Connector: JST/MOLEX/TE

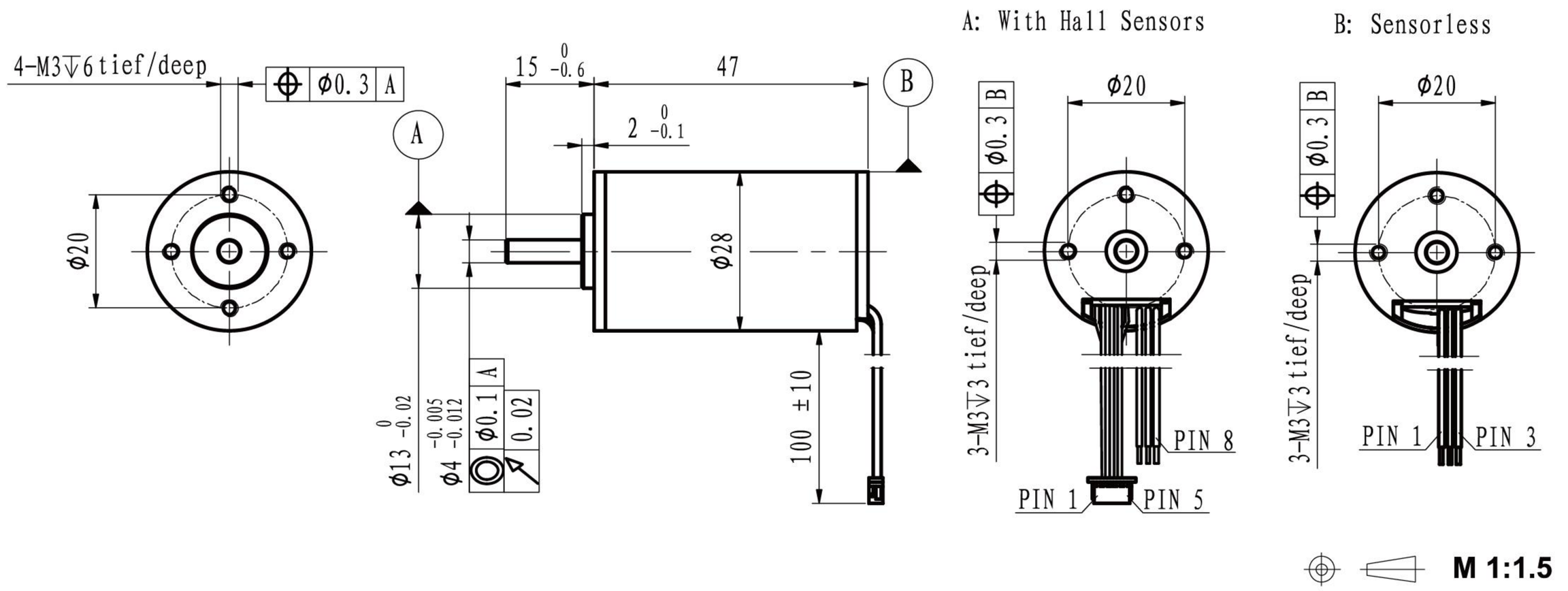

	Sensorless / With hall sensor	BL2847L-… / BL2847S-…	2413	3613
Motor data				
Values at nominal voltage				
1	Nominal voltage	V	24	36
2	No load speed	rpm	13108	13279
3	No load current	mA	140	80
4	Nominal speed	rpm	11992	12095
5	Nominal torque	mNm	20	20
6	Nominal current	A	1.30	0.86
7	Stall torque	mNm	234.91	224.31
8	Stall current	A	13.71	8.82
9	Max. efficiency	%	80.8	81.9
10	Terminal resistance	Ω	1.75	4.08
11	Terminal inductance	mH	0.16	0.61
12	Torque constant	mNm/A	17.31	25.65
13	Speed constant	rpm/V	552	372
14	Speed/torque gradient	rpm/mNm	56	59
15	Mechanical time constant	ms	3.3	3.5
16	Rotor inertia	gcm^2	5.6	5.6

17	Thermal resistance housing-ambient	11 K/W
18	Thermal resistance winding-housing	10 K/W
19	Thermal time constant winding	43 s
20	Thermal time constant motor	606 s
21	Ambient temprature	-30…+100℃
22	Max. permissible winding temperature	+150℃
23	Max. permissible speed	25000 rpm
24	Axial play at axial load <8 N	0 mm
	>8 N	max. 0.3 mm
25	Radial play	preloaded
26	Max. axial load (dynamic)	7.5 N
27	Max.force for press fits (static)	100 N
	(static, shaft supported)	2000 N
28	Max. radial loading, 5mm from flange	25 N
29	Number of pole pairs	2
30	Number of phases	3
31	Weight of motor	101 g

Operating Range

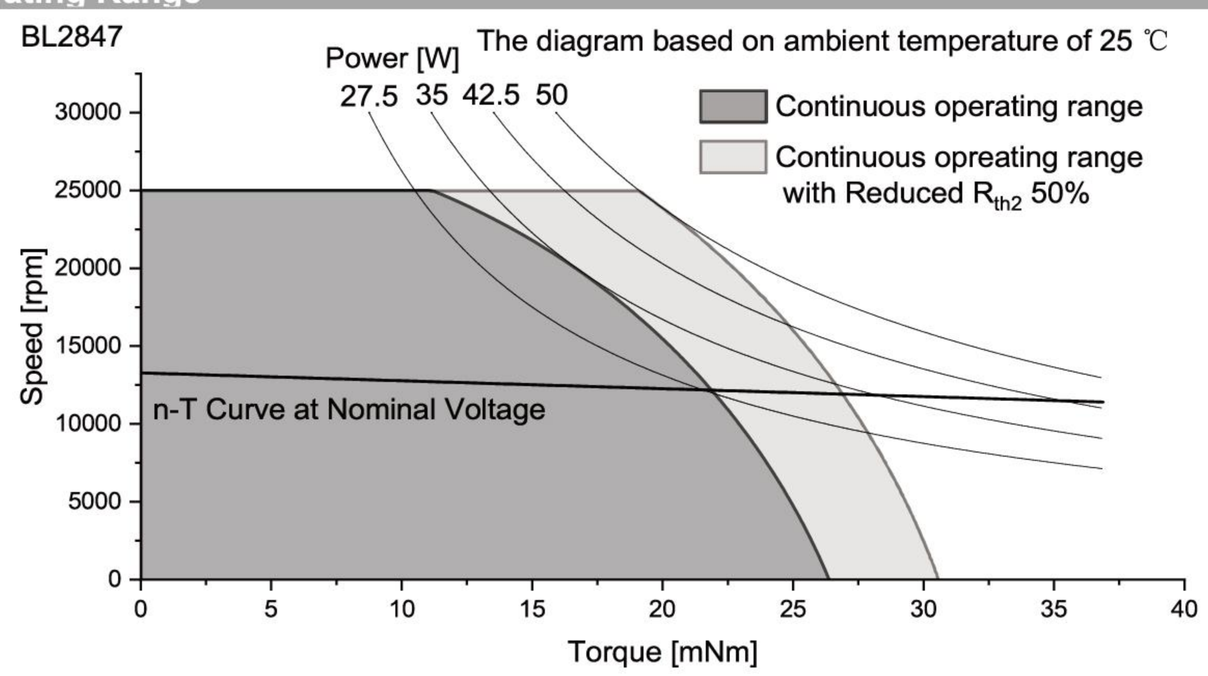

Connection

Conection A (Sensor)		PVC	
Pin 1	Vhall 3-18 VDC	AWG30	red
Pin 2	Hall sensor HA	AWG30	yellow
Pin 3	Hall sensor HB	AWG30	green
Pin 4	Hall sensor HC	AWG30	blue
Pin 5	GND	AWG30	black
Conector			
JST	PH1.0-5P		
Pin 6	Motor winding MA	AWG26	yellow
Pin 7	Motor winding MB	AWG26	green
Pin 8	Motor winding MC	AWG26	blue
Conection B (Sensorless)		PVC	
Pin 1	Motor winding MA	AWG26	yellow
Pin 2	Motor winding MB	AWG26	green
Pin 3	Motor winding MC	AWG26	blue

Configuration

Performance: Customized in the continuous operating range
Ball bearing: Preload
Flange: Standard frange front&back/customize the frange
Shaft: Length/Diameter/Cut face/double shaft/hollow shaft
Leadwire: PVC/Silicon/Teflon/UL No/Dimension/length
Connector: JST/MOLEX/TE

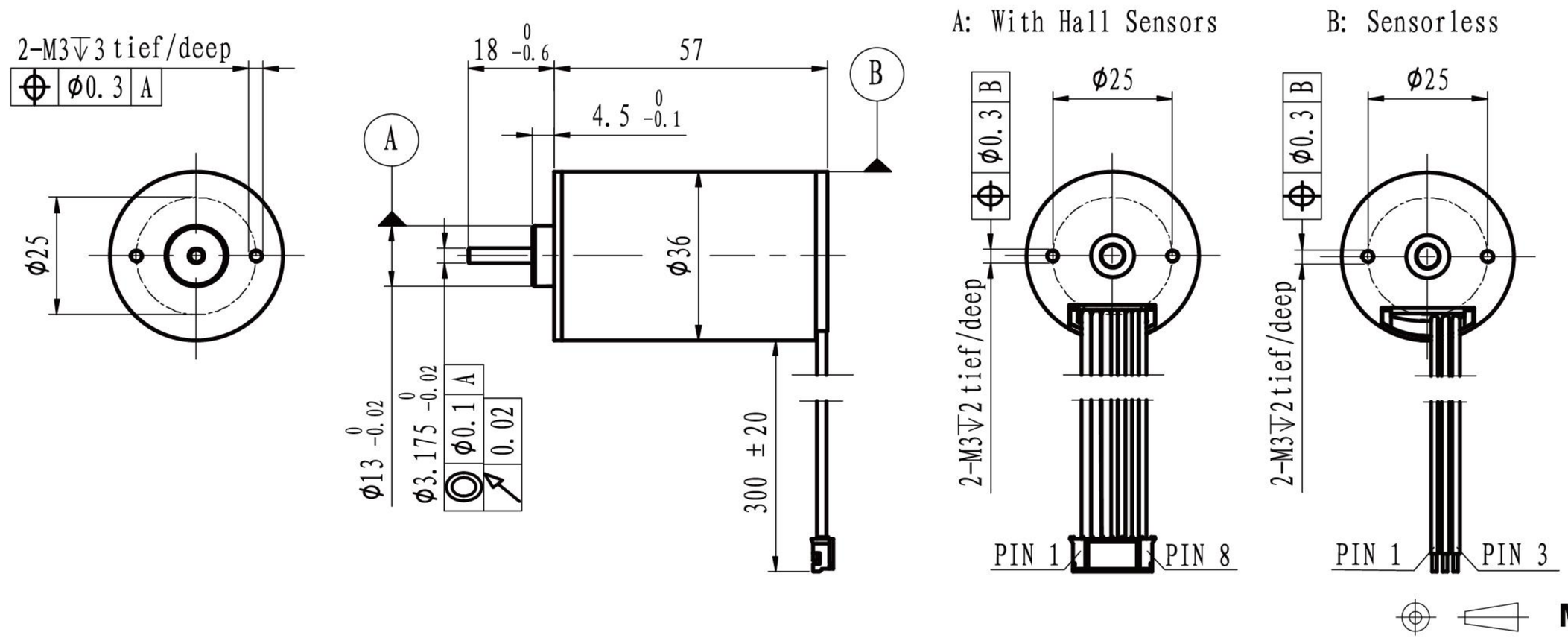

	Sensorless With hall sensor		BL3657L-… BL3657S-…	2413	3613						
Motor data											
Values at nominal voltage											
1	Nominal voltage		V	24	36						
2	No load speed		rpm	13150	13022						
3	No load current		mA	265	190						
4	Nominal speed		rpm	12230	12170						
5	Nominal torque		mNm	40	40						
6	Nominal current		A	2.58	1.72						
7	Stall torque		mNm	571.75	611.17						
8	Stall current		A	33.33	23.53						
9	Max. efficiency		%	83.0	82.8						
10	Terminal resistance		Ω	0.72	1.53						
11	Terminal inductance		mH	0.48	1.05						
12	Torque constant		mNm/A	17.29	26.19						
13	Speed constant		rpm/V	552	365						
14	Speed/torque gradient		rpm/mNm	23	21						
15	Mechanical time constant		ms	4.6	4.2						
16	Rotor inertia		gcm^2	19	19						
17	Thermal resistance housing-ambient		8 K/W								
18	Thermal resistance winding-housing		3.4 K/W								
19	Thermal time constant winding		26 s								
20	Thermal time constant motor		864 s								
21	Ambient temprature		-30…+100℃								
22	Max. permissible winding temperature		+150℃								
23	Max. permissible speed		25000 rpm								
24	Axial play at axial load	<8 N	0 mm								
		>8 N	max. 0.3 mm								
25	Radial play		preloaded								
26	Max. axial load (dynamic)		7.5 N								
27	Max.force for press fits (static)		100 N								
	(static, shaft supported)		2700 N								
28	Max. radial loading, 5mm from flange		25 N								
29	Number of pole pairs		2								
30	Number of phases		3								
31	Weight of motor		223 g								

Operating Range

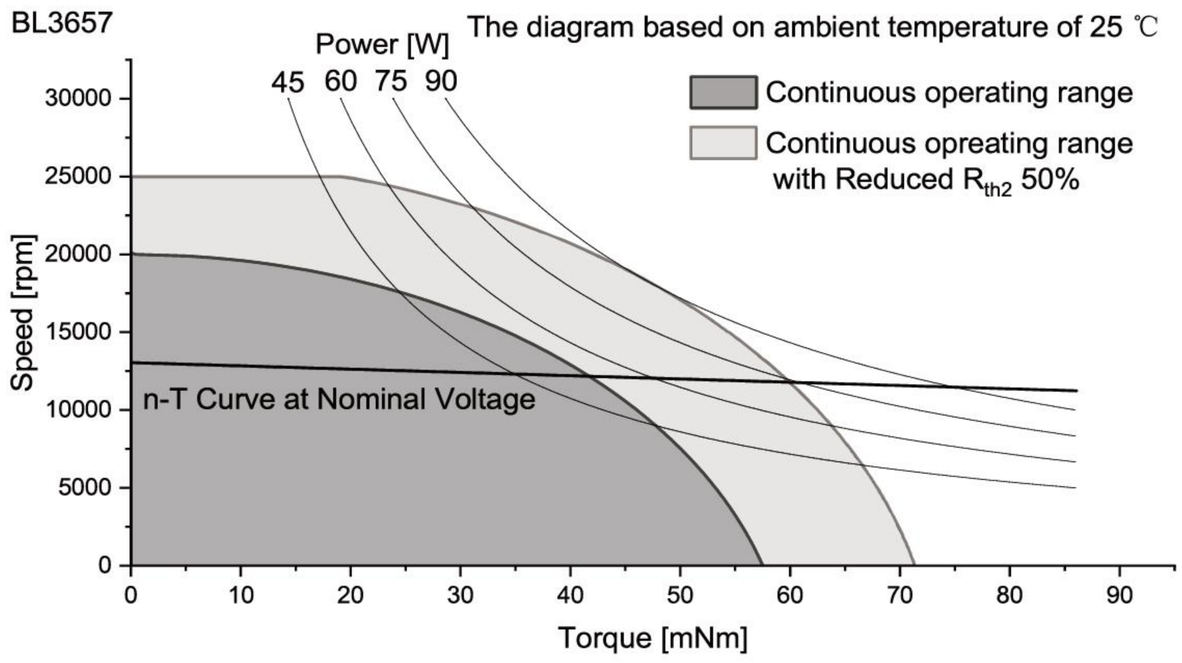

Connection

Conection A (Sensor)		PVC	
Pin 1	Vhall 3-18 VDC	AWG26	black
Pin 2	Hall sensor HA	AWG26	black
Pin 3	Hall sensor HB	AWG26	black
Pin 4	Hall sensor HC	AWG26	black
Pin 5	GND	AWG26	black
Pin 6	Motor winding MA	AWG26	black
Pin 7	Motor winding MB	AWG26	black
Pin 8	Motor winding MC	AWG26	black
Conector			
JST	PH2.0-8P		
Conection B (Sensorless)		PVC	
Pin 1	Motor winding MA	AWG26	yellow
Pin 2	Motor winding MB	AWG26	green
Pin 3	Motor winding MC	AWG26	blue

Configuration

Performance: Customized in the continuous operating range
Ball bearing: Preload
Flange: Standard frange front&back/customize the frange
Shaft: Length/Diameter/Cut face/double shaft/hollow shaft
Leadwire: PVC/Silicon/Teflon/UL No/Dimension/length
Connector: JST/MOLEX/TE

BD Series

Electronics integrated

Model	Dimension (mm)	Nominal Troque (mNm)	Nominal Speed (rpm)	Page
BD1621	Φ16x21	1.5	5000	88
BD1632	Φ16x32	2.5	5000	89
BD2232	Φ22x32	4	5000	90
BD2438	Φ24x38	10	3000	91
BD2448	Φ24x48	15	2500	92
BD2854	Φ28x54	25	3000	93
BD3238	Φ32x38	30	3000	94
BD3248	Φ32x48	40	3000	95
BD3260	Φ32x60	45	3000	96
BD3650	Φ36x50	50	3000	97
BD3670	Φ36x70	60	3000	98
BD4270	Φ42x70	80	3000	99
BD4290	Φ42x90	100	3000	100

SLOTTED BLDC MOTOR

BD Series

Electronics integrated

With the integrated controller, the series simplifies system design, reduces external wiring and components, and makes the overall structure more compact. Second, the integrated design reduces points of failure and improves the reliability and durability of the system. Because the controller is seamlessly matched to the motor, the integrated solution also optimizes motor performance, provides more precise control, and improves efficiency and dynamic response.
In addition, the integrated motor takes up less space, reducing installation complexity and cost. At the same time, the simplified installation and maintenance process also reduces operating time and maintenance costs.

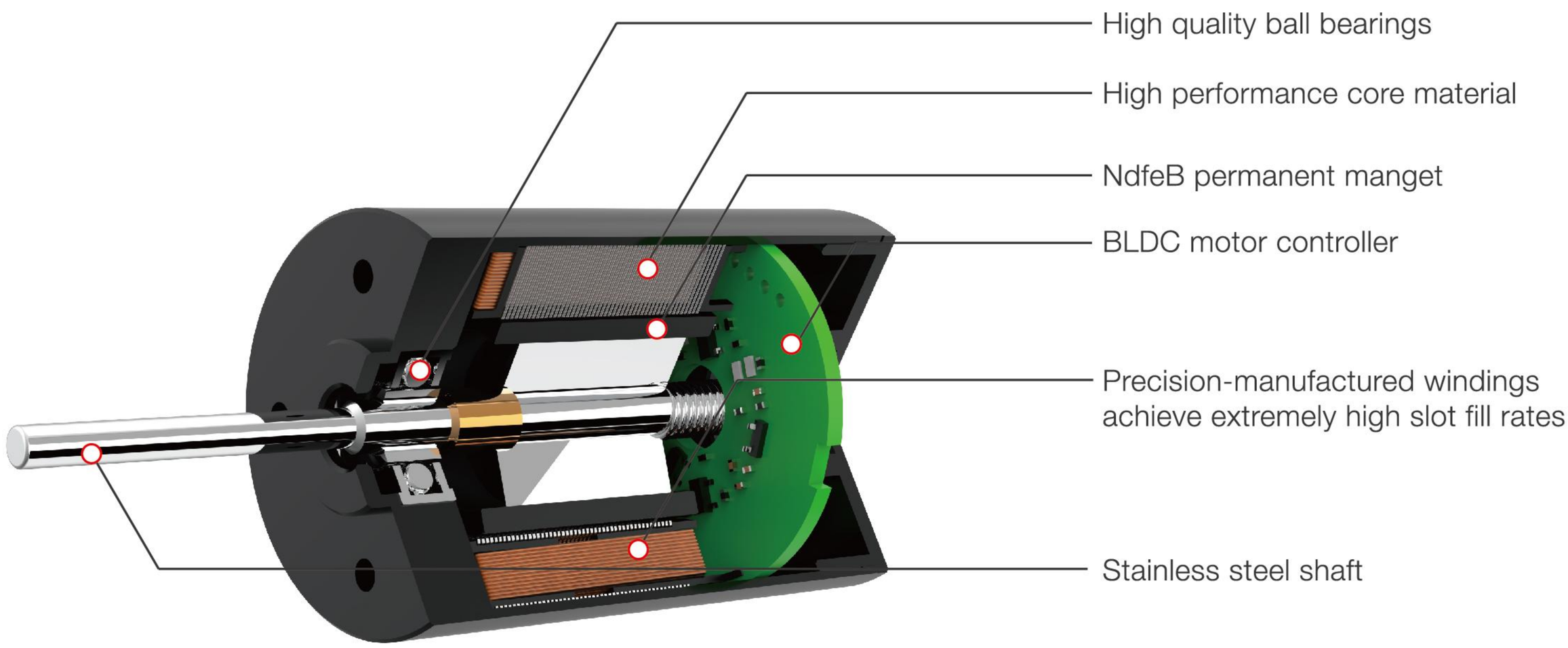

Basic Data:
Diameter: φ16mm-42mmm
Maximum Length: 90mm
Operate Voltage: 4.5V-24VDC
Maximum Permissiblespeed: 10,000rpm
Operate temperature: -30°C-+80°C

Typical features:
Electronics integrated
Cost effective
Large starting torque
Low noise
Good heat dissipation
Long operational lifetime
Customizable

I/O Schematics

Speed command input

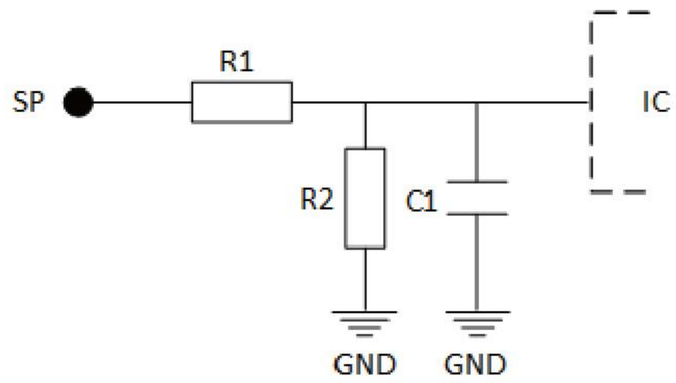

Speed output

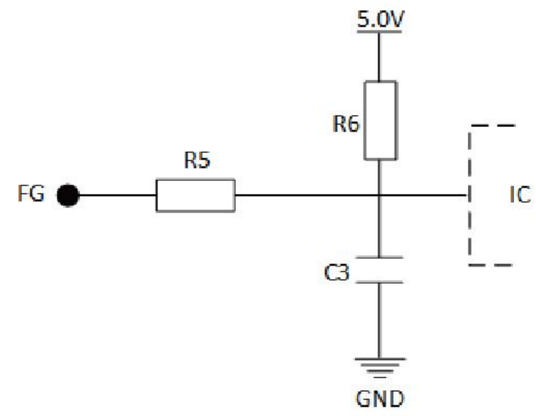

Direction command input

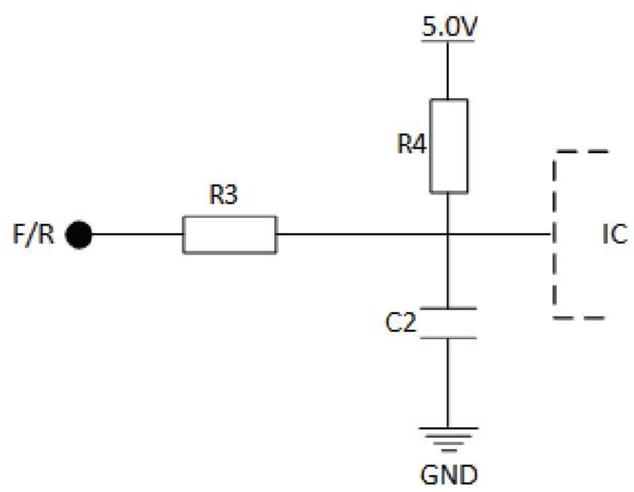

Speed output signal

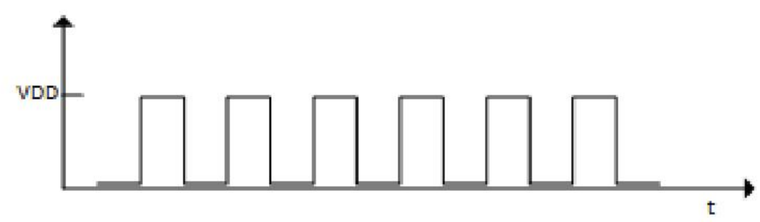

Electrical Connections

Version	Description	
5-Wire	1	Power supply
	2	GND
	3	Speed command input(SP)
	4	Dirction command input(F/R)
	5	Speed signal output (FG)

ECD12 and ECD16, because these two models use integrated chips.

The built-in series product interface is configured up to five wires, with three function pins, namely speed control SP (compatible with analog voltage and PWM duty cycle control, PWM frequency range of 10KHz -35KHz, 5V TTL level), forward and reverse control F/R (CCW operation by default, CW operation by connecting ground), speed feedback output FG (one pulse per turn). If you need enable and brake functions, you need to replace the two functions among three function pins above.

Please note that the standard products in the catalog are two-wire, only power and ground wires

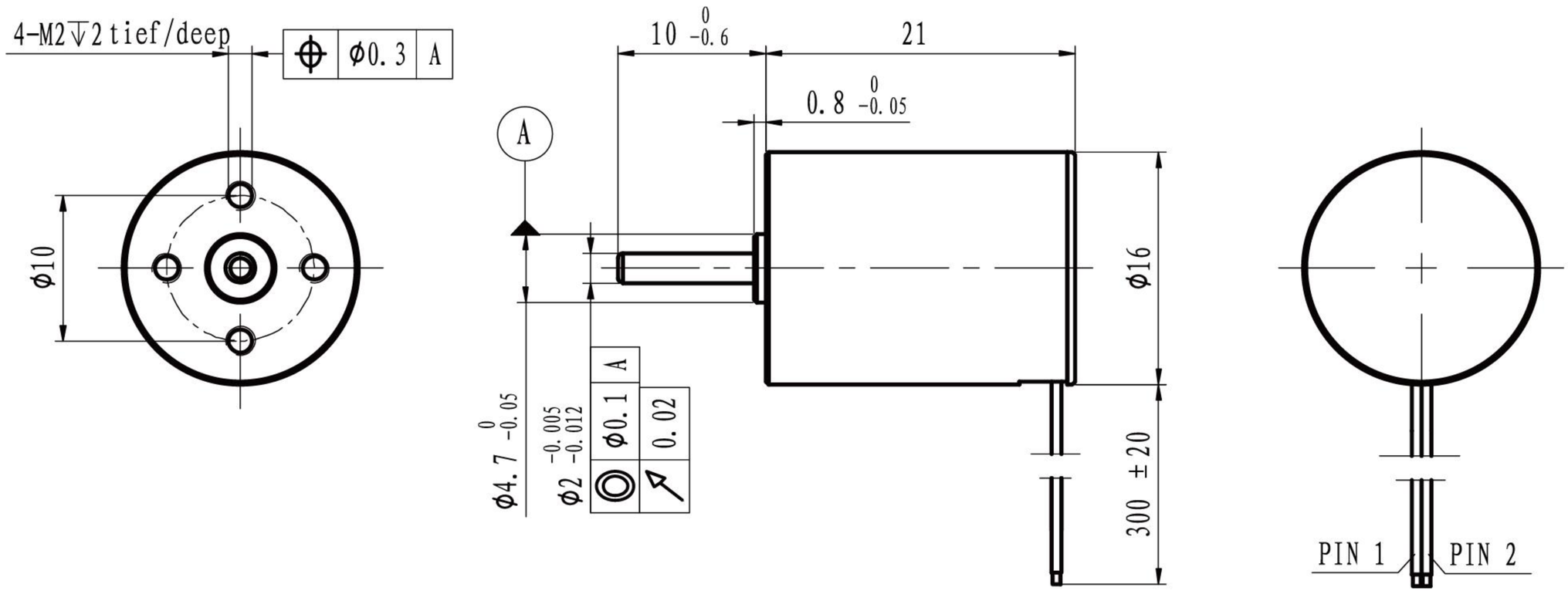

M 1.5:1

	Sensorless	BD1621L-…	0308	0606
Motor data				
Values at nominal voltage				
1	Nominal voltage	V	3	6
2	No load speed	rpm	8492	6500
3	No load current	mA	100	50
4	Nominal speed	rpm	5267	3483
5	Nominal torque	mNm	1.5	1.5
6	Nominal current	A	0.58	0.24
7	Stall torque	mNm	3.95	3.23
8	Stall current	A	1.36	0.46
9	Max. efficiency	%	53.2	45.0
10	Supply voltage +Vcc	V	2.7..5	4.5..7
11	Direction of ratation		CW	CW
12	Torque constant	mNm/A	3.13	7.86
13	Speed constant	rpm/V	3055	1215
14	Speed/torque gradient	rpm/mNm	2150	2012
15	Mechanical time constant	ms	4.5	4.2
16	Rotor inertia	gcm^2	0.2	0.2

17	Thermal resistance housing-ambient	25.7 K/W
18	Thermal resistance winding-housing	18.7 K/W
19	Thermal time constant winding	11 s
20	Thermal time constant motor	288 s
21	Ambient temprature	-30…+100℃
22	Max. permissible winding temperature	+150℃
23	Max. permissible speed	12000 rpm
24	Axial play at axial load <1.8 N	0 mm
	>1.8 N	max. 0.3 mm
25	Radial play	preloaded
26	Max. axial load (dynamic)	1.3 N
27	Max.force for press fits (static)	15 N
	(static, shaft supported)	350 N
28	Max. radial loading, 5mm from flange	5 N
29	Number of pole pairs	2
30	Number of phases	3
31	Weight of motor	14.7 g

Operating Range

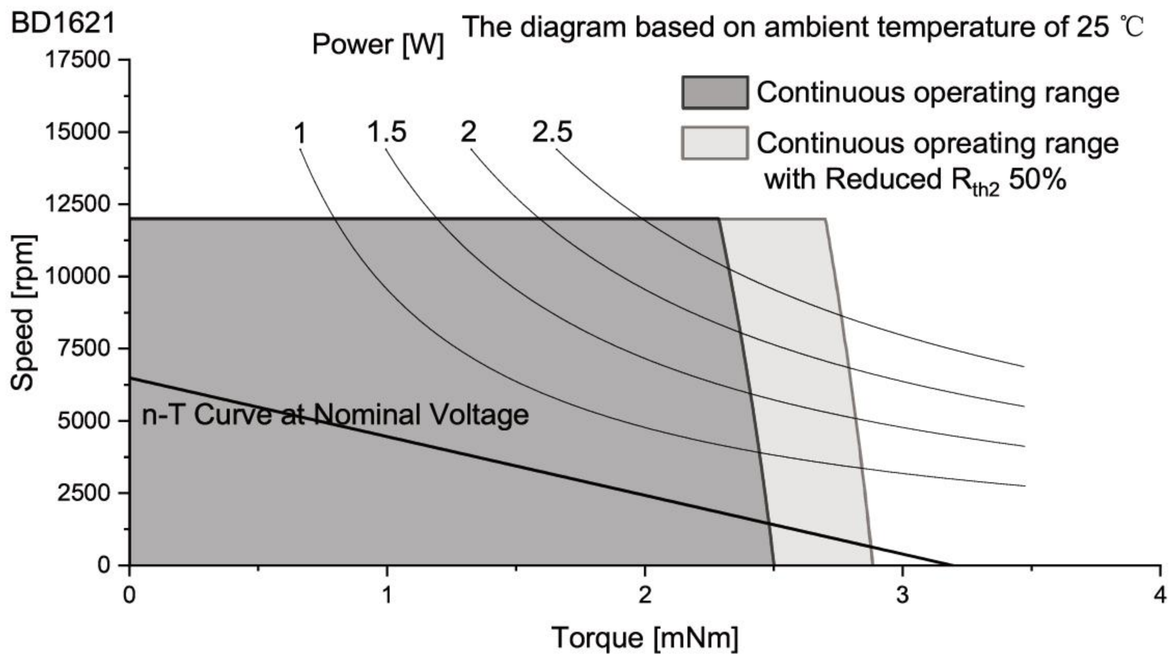

Controller features	
Sensorless, Open loop, Imax < 0.5A	
Overload protection, Stall protection	
Max. temperature of electronics	+105℃

Connection

Conection

		PVC	
Pin 1	+VCC	AWG28	red
Pin 2	GND	AWG28	black

Caution:
Incorrect lead connection will damage the controller!

Configuration

Function: On&Off/Direction/Speed control/Brake
Speed closed&open-loop Control/Speed feedback
Performance: Customized in the continuous operating range
Ball bearing: Preload
Flange: Standard frange front&back/customize the frange
Shaft: Length/Diameter/Cut face
Leadwire: PVC/Silicon/Teflon/UL No/Dimension/length
Connector: JST/MOLEX/TE

More:
Please contact our sales engineers

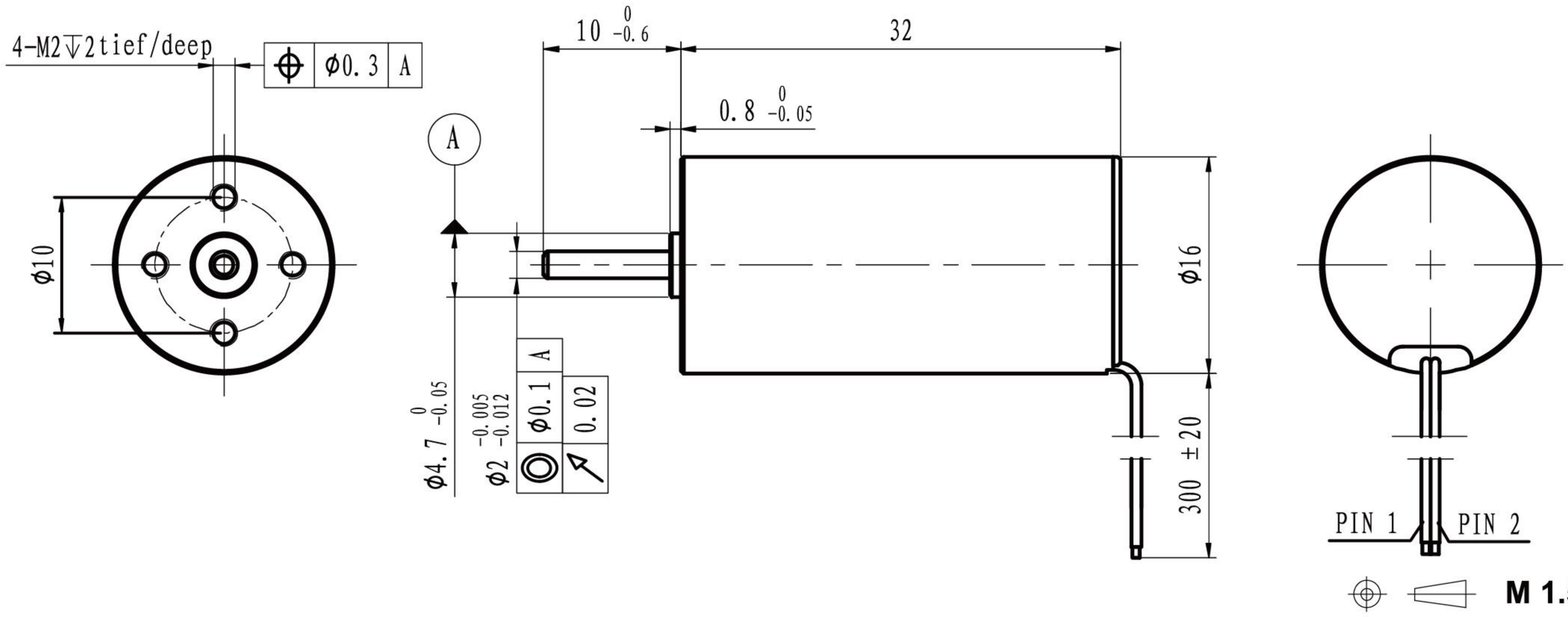

	Sensorless	BD1632L-…	0608	1208						
Motor data										
Values at nominal voltage										
1	Nominal voltage	V	6	12						
2	No load speed	rpm	8032	8055						
3	No load current	mA	80	40						
4	Nominal speed	rpm	5046	4865						
5	Nominal torque	mNm	2.5	2.5						
6	Nominal current	A	0.46	0.23						
7	Stall torque	mNm	6.72	6.31						
8	Stall current	A	1.10	0.52						
9	Max. efficiency	%	53.3	52.2						
10	Supply voltage +Vcc	V	4.5..7	8..13						
11	Direction of ratation		CW	CW						
12	Torque constant	mNm/A	6.61	13.13						
13	Speed constant	rpm/V	1444	727						
14	Speed/torque gradient	rpm/mNm	1194	1276						
15	Mechanical time constant	ms	4.6	4.9						
16	Rotor inertia	gcm^2	0.37	0.37						

17	Thermal resistance housing-ambient	17.6 K/W
18	Thermal resistance winding-housing	17.5 K/W
19	Thermal time constant winding	11.4 s
20	Thermal time constant motor	301 s
21	Ambient temprature	-30…+100℃
22	Max. permissible winding temperature	+150℃
23	Max. permissible speed	12000 rpm
24	Axial play at axial load <1.8 N	0 mm
	>1.8 N	max. 0.3 mm
25	Radial play	preloaded
26	Max. axial load (dynamic)	1.3 N
27	Max.force for press fits (static)	15 N
	(static, shaft supported)	350 N
28	Max. radial loading, 5mm from flange	5 N
29	Number of pole pairs	2
30	Number of phases	3
31	Weight of motor	23 g

Operating Range

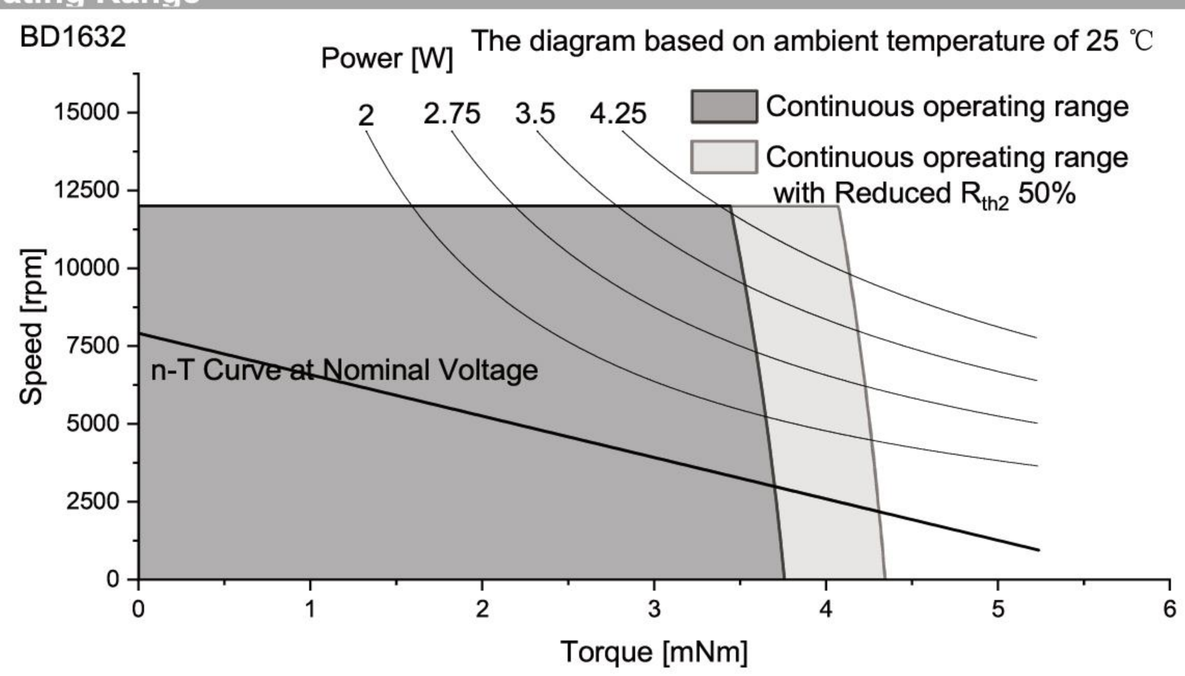

Controller features

Sensorless, Open loop, Imax < 0.5A	
Overload protection, Stall protection	
Max. temperature of electronics	+105℃

Connection

Conection

		PVC	
Pin 1	+VCC	AWG28	red
Pin 2	GND	AWG28	black

Caution:
Incorrect lead connection will damage the controller!

Configuration

Function: On&Off/Direction/Speed control/Brake
Speed closed&open-loop Control/Speed feedback
Performance: Customized in the continuous operating range
Ball bearing: Preload
Flange: Standard frange front&back/customize the frange
Shaft: Length/Diameter/Cut face
Leadwire: PVC/Silicon/Teflon/UL No/Dimension/length
Connector: JST/MOLEX/TE

More:
Please contact our sales engineers

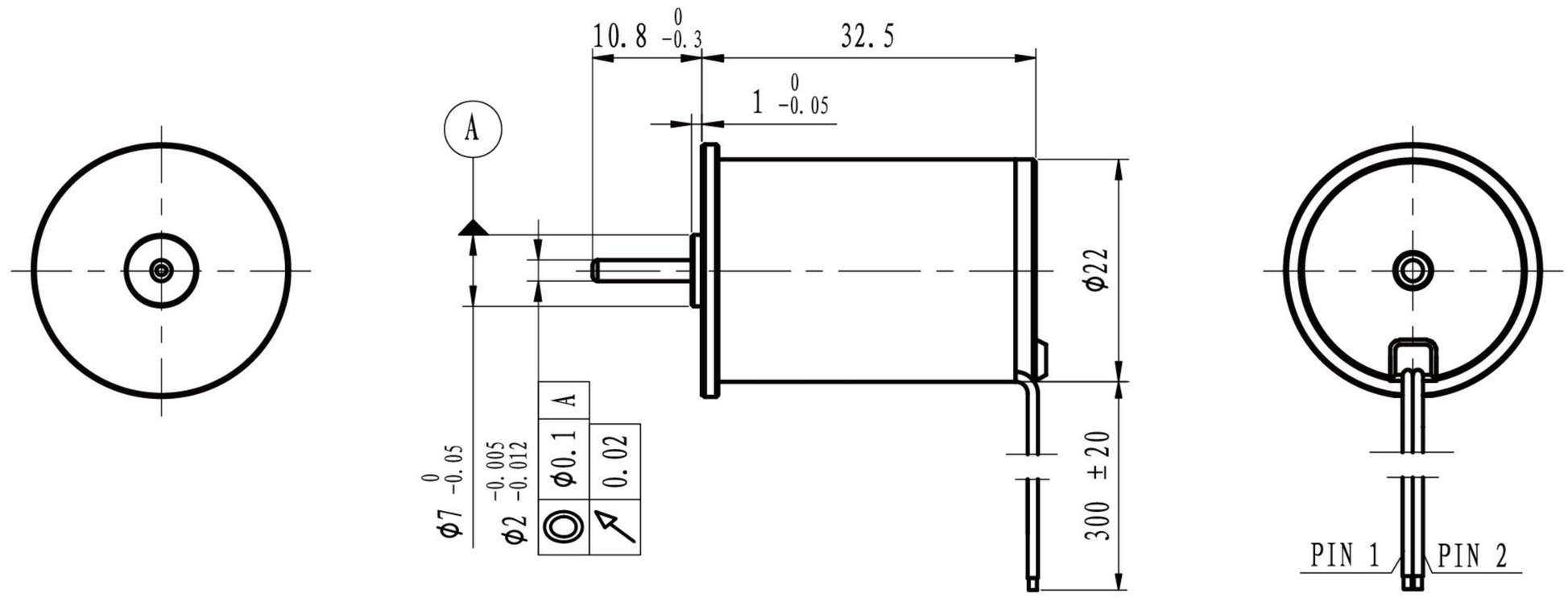

M 1:1

			BD2232S-…	0608	1208						
Motor data											
Values at nominal voltage											
1	Nominal voltage		V	6	12						
2	No load speed		rpm	8024	7882						
3	No load current		mA	90	60						
4	Nominal speed		rpm	5288	4998						
5	Nominal torque		mNm	4	4						
6	Nominal current		A	0.68	0.36						
7	Stall torque		mNm	11.73	10.93						
8	Stall current		A	1.82	0.87						
9	Max. efficiency		%	60.5	54.3						
10	Supply voltage +Vcc		V	10..28	10.28						
11	Direction of ratation			CW	CW						
12	Torque constant		mNm/A	6.79	13.53						
13	Speed constant		rpm/V	1407	706						
14	Speed/torque gradient		rpm/mNm	684	721						
15	Mechanical time constant		ms	15.0	15.9						
16	Rotor inertia		gcm^2	2.1	2.1						

17	Thermal resistance housing-ambient		15.2 K/W
18	Thermal resistance winding-housing		6.0 K/W
19	Thermal time constant winding		11 s
20	Thermal time constant motor		383 s
21	Ambient temprature		-30…+100℃
22	Max. permissible winding temperature		+150℃
23	Max. permissible speed		12000 rpm
24	Axial play at axial load	<4 N	0 mm
		>4 N	max. 0.3 mm
25	Radial play		preloaded
26	Max. axial load (dynamic)		3.5 N
27	Max.force for press fits (static)		44 N
	(static, shaft supported)		1200 N
28	Max. radial loading, 5mm from flange		15 N
29	Number of pole pairs		2
30	Number of phases		3
31	Weight of motor		34 g

Operating Range

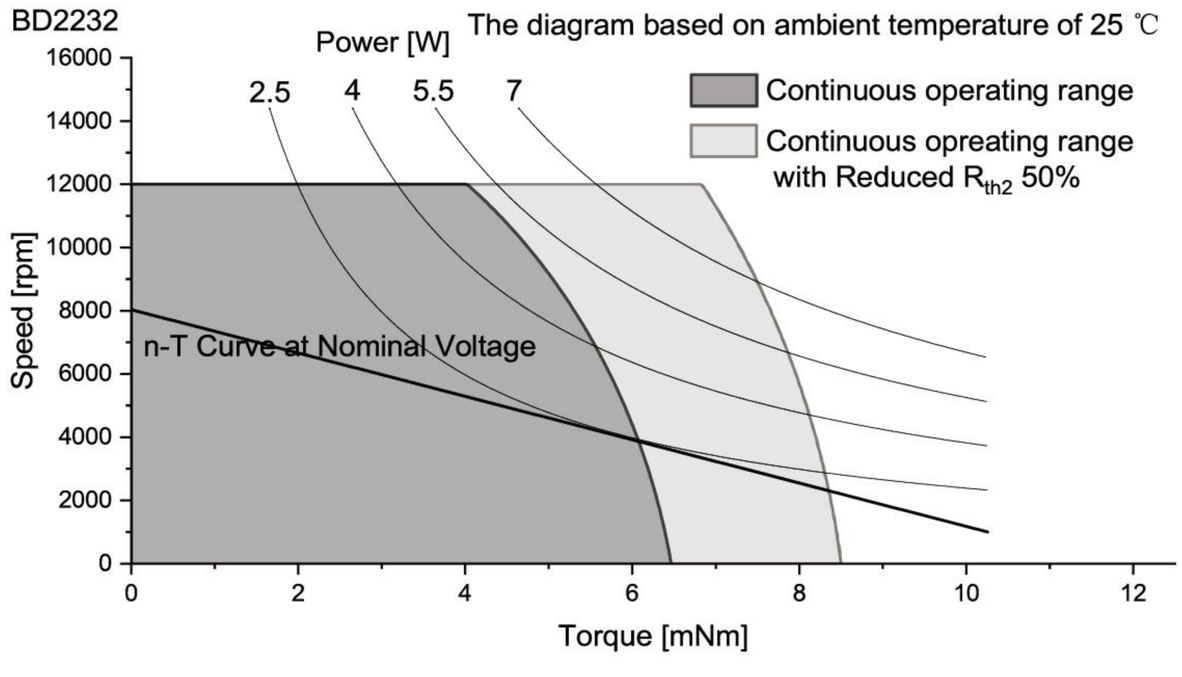

Controller features	
Sensor, Open loop, Imax < 1.5A	
Overload protection, Stall protection	
Max. temperature of electronics	+105℃

Connection

Conection		PVC	
Pin 1	+VCC	AWG28	red
Pin 2	GND	AWG28	black

Caution:
Incorrect lead connection will damage the controller!

Configuration

Function: On&Off/Direction/Speed control/Brake
Speed closed&open-loop Control/Speed feedback
Performance: Customized in the continuous operating range
Ball bearing: Preload
Flange: Standard frange front&back/customize the frange
Shaft: Length/Diameter/Cut face
Leadwire: PVC/Silicon/Teflon/UL No/Dimension/length
Connector: JST/MOLEX/TE

More:
Please contact our sales engineers

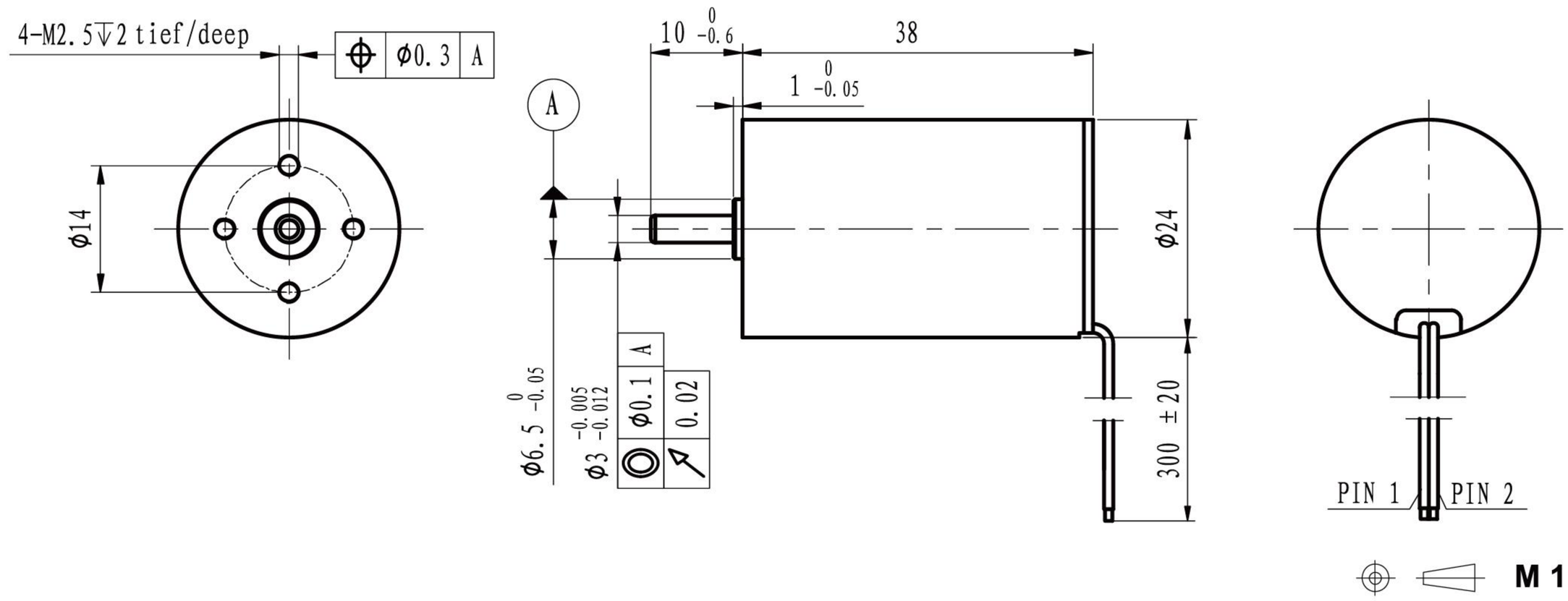

With hall sensor	BD2438S-…	1204	2404
Motor data			
Values at nominal voltage			
1 Nominal voltage	V	12	24
2 No load speed	rpm	4045	4101
3 No load current	mA	90	50
4 Nominal speed	rpm	2907	2913
5 Nominal torque	mNm	10	10
6 Nominal current	A	0.47	0.24
7 Stall torque	mNm	35.53	34.52
8 Stall current	A	1.43	0.71
9 Max. efficiency	%	56.1	54.1
10 Supply voltage +Vcc	V	10..28	10..28
11 Direction of ratation		CW	CW
12 Torque constant	mNm/A	26.54	51.97
13 Speed constant	rpm/V	360	184
14 Speed/torque gradient	rpm/mNm	114	119
15 Mechanical time constant	ms	3.4	3.5
16 Rotor inertia	gcm^2	2.85	2.85

17 Thermal resistance housing-ambient		10.2 K/W
18 Thermal resistance winding-housing		6.4 K/W
19 Thermal time constant winding		36 s
20 Thermal time constant motor		555 s
21 Ambient temprature		-30…+100℃
22 Max. permissible winding temperature		+150℃
23 Max. permissible speed		8000 rpm
24 Axial play at axial load	<4 N	0 mm
	>4 N	max. 0.3 mm
25 Radial play		preloaded
26 Max. axial load (dynamic)		3.5 N
27 Max.force for press fits (static)		44 N
(static, shaft supported)		1200 N
28 Max. radial loading, 5mm from flange		15 N
29 Number of pole pairs		3
30 Number of phases		3
31 Weight of motor		57 g

Operating Range

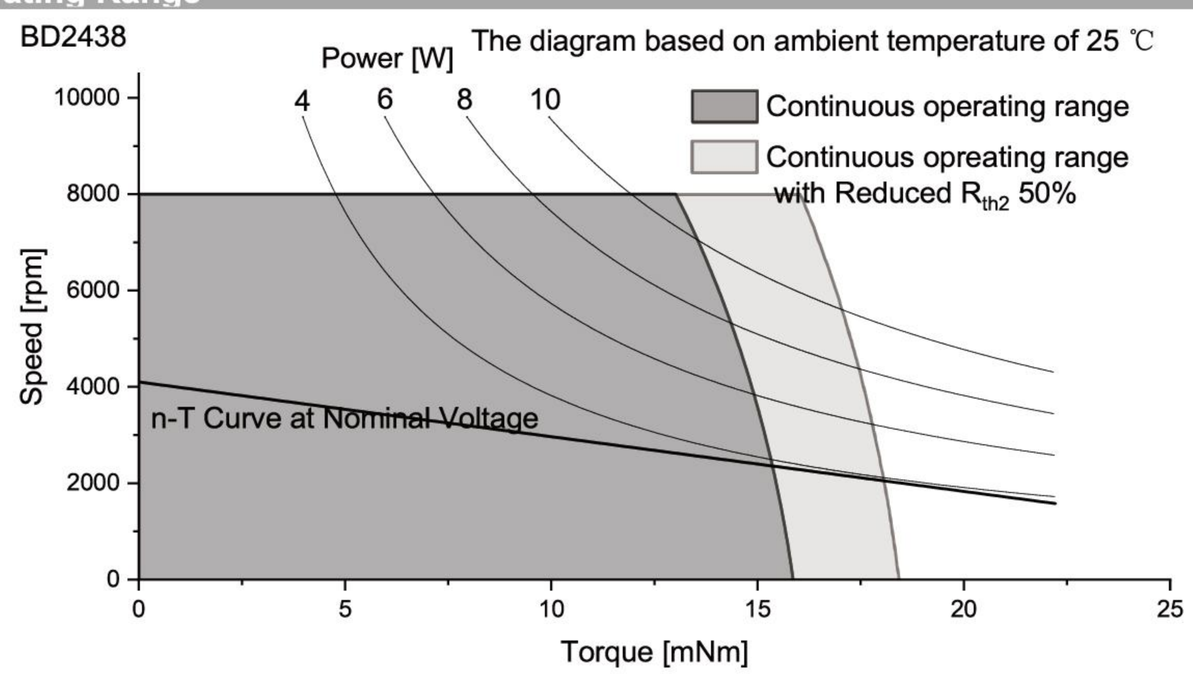

Controller features	
Sensor, Open loop, Imax < 1.5A	
Overload protection, Stall protection	
Max. temperature of electronics	+105℃

Connection

Conection		PVC	
Pin 1	+VCC	AWG24	red
Pin 2	GND	AWG24	black

Caution:
Incorrect lead connection will damage the controller!

Configuration

Function: On&Off/Direction/Speed control/Brake
Speed closed&open-loop Control/Speed feedback
Performance: Customized in the continuous operating range
Ball bearing: Preload
Flange: Standard frange front&back/customize the frange
Shaft: Length/Diameter/Cut face
Leadwire: PVC/Silicon/Teflon/UL No/Dimension/length
Connector: JST/MOLEX/TE

More:
Please contact our sales engineers

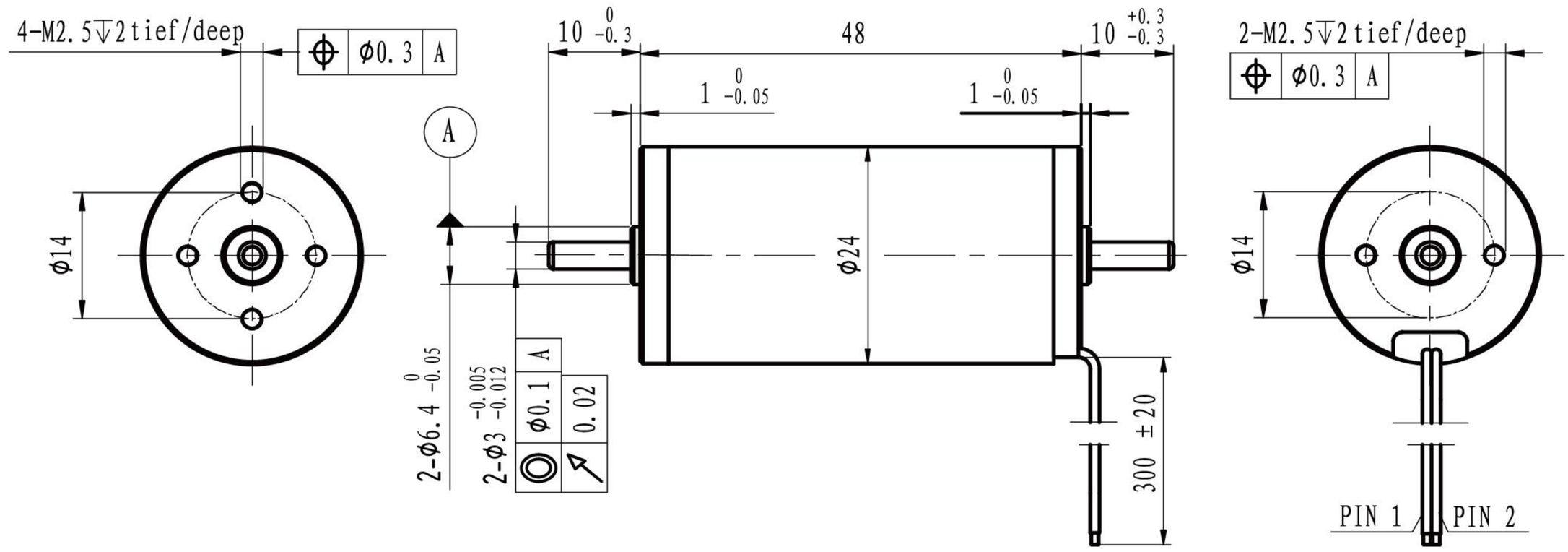

M 1:1

With hall sensor	BD2448S-…	1204	2404
Motor data			
Values at nominal voltage			
1 Nominal voltage	V	12	24
2 No load speed	rpm	3916	4011
3 No load current	mA	90	50
4 Nominal speed	rpm	2404	2399
5 Nominal torque	mNm	15	15
6 Nominal current	A	0.64	0.33
7 Stall torque	mNm	38.86	37.33
8 Stall current	A	1.50	0.75
9 Max. efficiency	%	57.0	55.0
10 Supply voltage +Vcc	V	10..28	10..28
11 Direction of ratation		CW	CW
12 Torque constant	mNm/A	27.51	53.33
13 Speed constant	rpm/V	347	179
14 Speed/torque gradient	rpm/mNm	101	107
15 Mechanical time constant	ms	3.8	4.0
16 Rotor inertia	gcm^2	3.57	3.57

17 Thermal resistance housing-ambient		10.2 K/W
18 Thermal resistance winding-housing		6.4 K/W
19 Thermal time constant winding		36 s
20 Thermal time constant motor		555 s
21 Ambient temprature		-30…+100℃
22 Max. permissible winding temperature		+150℃
23 Max. permissible speed		8000 rpm
24 Axial play at axial load	<4 N	0 mm
	>4 N	max. 0.3 mm
25 Radial play		preloaded
26 Max. axial load (dynamic)		3.5 N
27 Max.force for press fits (static)		44 N
(static, shaft supported)		1200 N
28 Max. radial loading, 5mm from flange		15 N
29 Number of pole pairs		3
30 Number of phases		3
31 Weight of motor		94 g

Operating Range

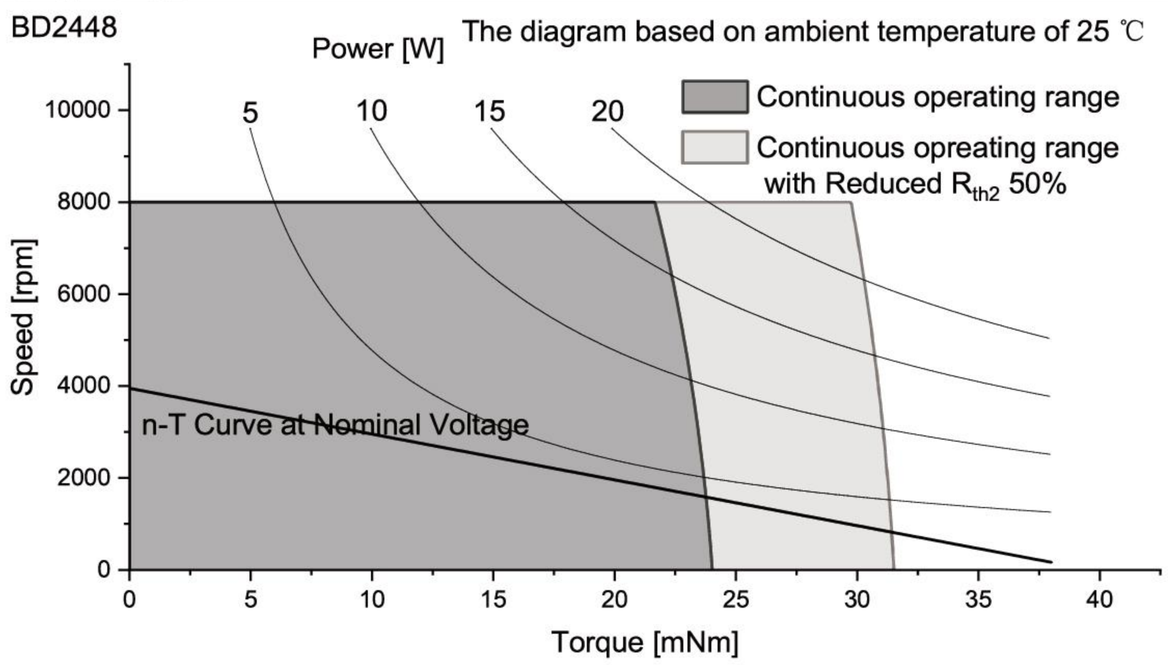

Controller features	
Sensor, Open loop, Imax < 1.5A	
Overload protection, Stall protection	
Max. temperature of electronics	+105℃

Connection

Conection

		PVC	
Pin 1	+VCC	AWG24	red
Pin 2	GND	AWG24	black

Caution:
Incorrect lead connection will damage the controller!

Configuration

Function: On&Off/Direction/Speed control/Brake
Speed closed&open-loop Control/Speed feedback
Performance: Customized in the continuous operating range
Ball bearing: Preload
Flange: Standard frange front&back/customize the frange
Shaft: Length/Diameter/Cut face
Leadwire: PVC/Silicon/Teflon/UL No/Dimension/length
Connector: JST/MOLEX/TE

More:
Please contact our sales engineers

BD series. Slotted Brushless DC Motor with int. controller

BD2854, Φ28mmX54mm

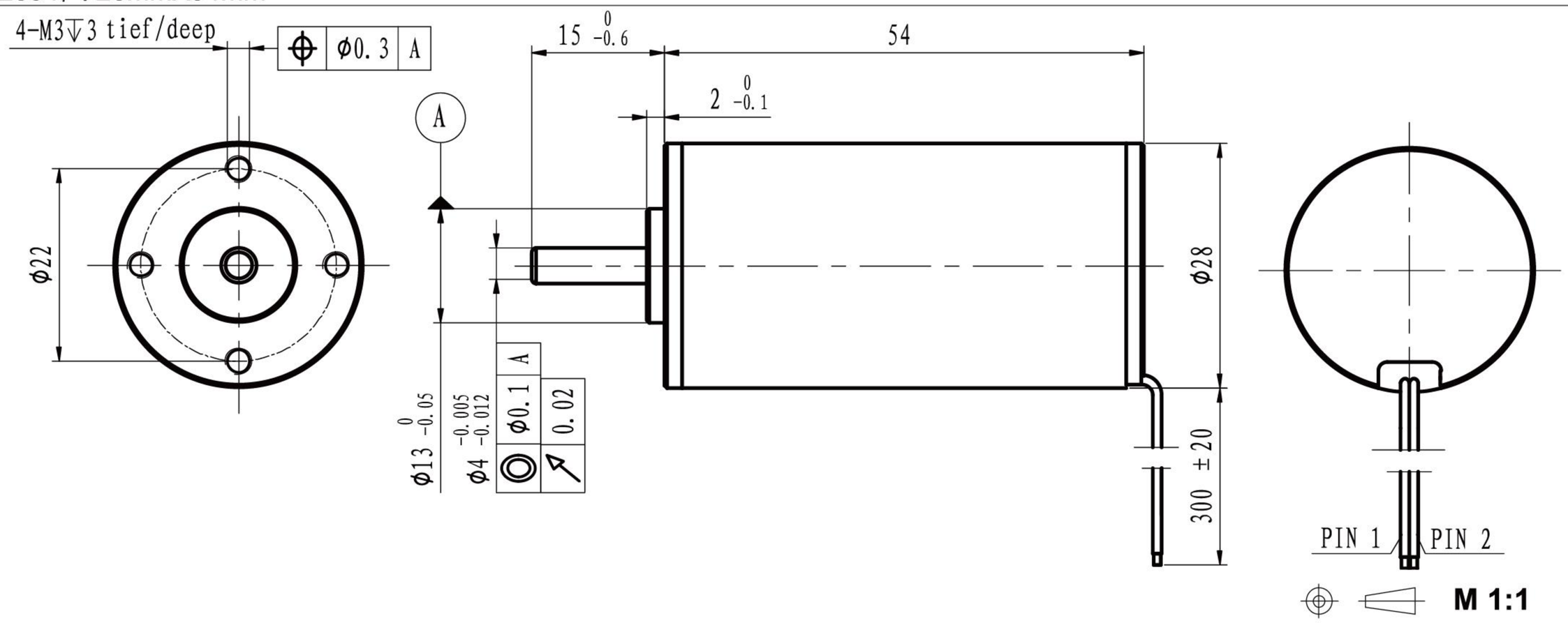

	With hall sensor	BD2854S-…	1204	2404						
Motor data										
Values at nominal voltage										
1	Nominal voltage	V	12	24						
2	No load speed	rpm	3950	4011						
3	No load current	mA	110	70						
4	Nominal speed	rpm	2964	3218						
5	Nominal torque	mNm	25	25						
6	Nominal current	A	1.00	0.52						
7	Stall torque	mNm	100.17	126.43						
8	Stall current	A	3.67	2.35						
9	Max. efficiency	%	68.4	68.5						
10	Supply voltage +Vcc	V	10..28	10..28						
11	Direction of ratation		CW	CW						
12	Torque constant	mNm/A	28.14	55.44						
13	Speed constant	rpm/V	339	172						
14	Speed/torque gradient	rpm/mNm	39	32						
15	Mechanical time constant	ms	2.6	2.1						
16	Rotor inertia	gcm^2	6.4	6.4						

17	Thermal resistance housing-ambient	11.2 K/W
18	Thermal resistance winding-housing	8 K/W
19	Thermal time constant winding	29 s
20	Thermal time constant motor	1211 s
21	Ambient temprature	-30…+100℃
22	Max. permissible winding temperature	+150℃
23	Max. permissible speed	12000 rpm
24	Axial play at axial load <8 N	0 mm
	>8 N	max. 0.3 mm
25	Radial play	preloaded
26	Max. axial load (dynamic)	7.5 N
27	Max.force for press fits (static)	100 N
	(static, shaft supported)	2000 N
28	Max. radial loading, 5mm from flange	25 N
29	Number of pole pairs	3
30	Number of phases	3
31	Weight of motor	156 g

Operating Range

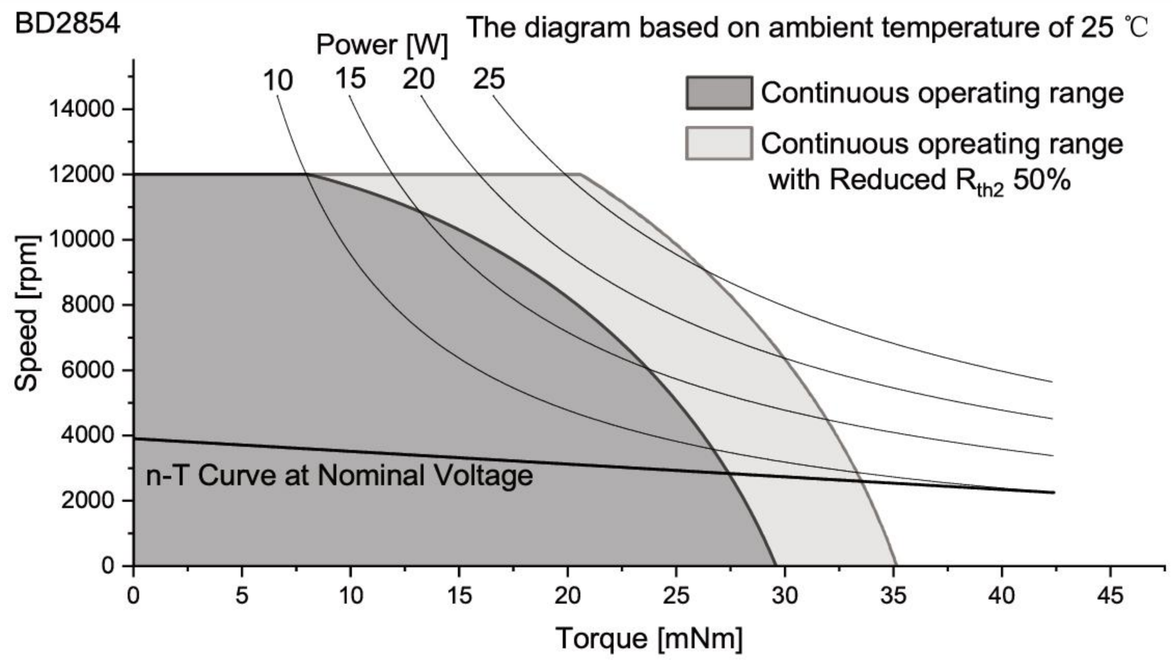

Controller features	
Sensor, Open loop, Imax < 1.8A	
Overload protection, Stall protection	
Max. temperature of electronics	+105℃

Connection

Conection		PVC	
Pin 1	+VCC	AWG22	red
Pin 2	GND	AWG22	black

Caution:
Incorrect lead connection will damage the controller!

Configuration

Function: On&Off/Direction/Speed control/Brake
Speed closed&open-loop Control/Speed feedback
Performance: Customized in the continuous operating range
Ball bearing: Preload
Flange: Standard frange front&back/customize the frange
Shaft: Length/Diameter/Cut face
Leadwire: PVC/Silicon/Teflon/UL No/Dimension/length
Connector: JST/MOLEX/TE

More:
Please contact our sales engineers

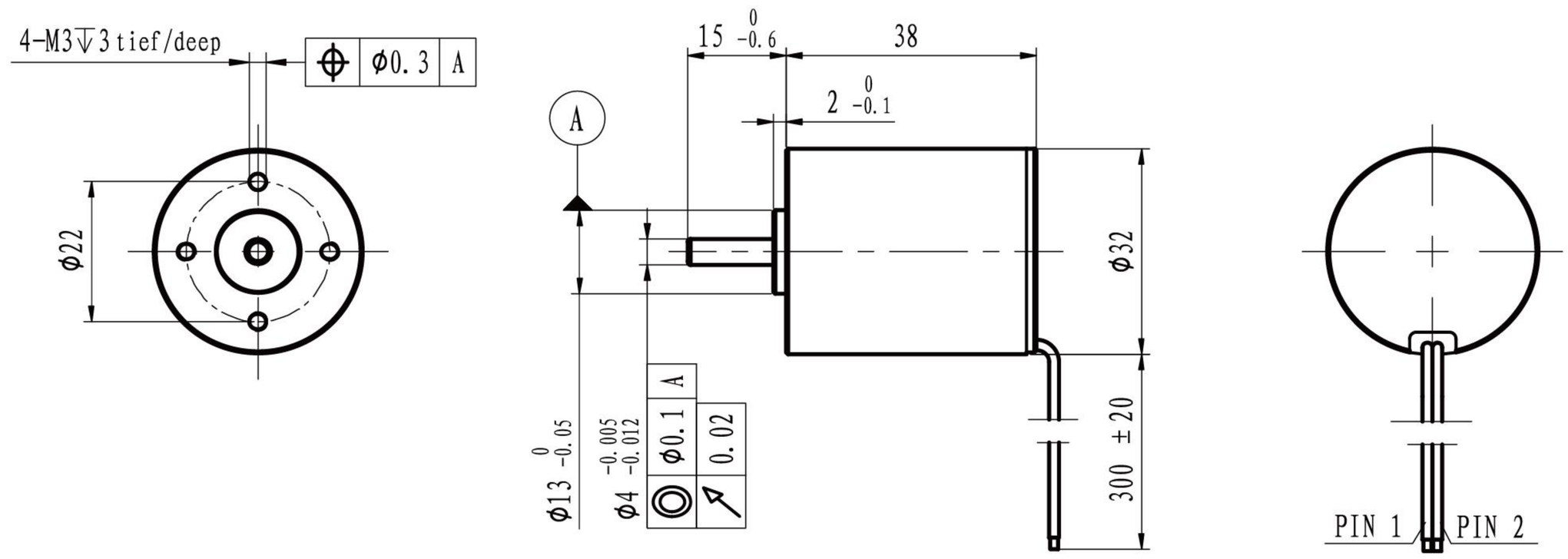

M 1:1.5

	With hall sensor	BD3238S-…	1204	2404
Motor data				
Values at nominal voltage				
1	Nominal voltage	V	12	24
2	No load speed	rpm	3981	3998
3	No load current	mA	140	90
4	Nominal speed	rpm	2925	2969
5	Nominal torque	mNm	30	30
6	Nominal current	A	1.22	0.64
7	Stall torque	mNm	113.06	116.59
8	Stall current	A	4.20	2.21
9	Max. efficiency	%	66.8	63.7
10	Supply voltage +Vcc	V	10..28	10..28
11	Direction of ratation		CW	CW
12	Torque constant	mNm/A	27.83	54.99
13	Speed constant	rpm/V	343	174
14	Speed/torque gradient	rpm/mNm	35	34
15	Mechanical time constant	ms	4.6	4.5
16	Rotor inertia	gcm^2	12.5	12.5

17	Thermal resistance housing-ambient	9.3 K/W
18	Thermal resistance winding-housing	5.7 K/W
19	Thermal time constant winding	15 s
20	Thermal time constant motor	432 s
21	Ambient temprature	-30…+100℃
22	Max. permissible winding temperature	+150℃
23	Max. permissible speed	8000 rpm
24	Axial play at axial load <8 N	0 mm
	>8 N	max. 0.3 mm
25	Radial play	preloaded
26	Max. axial load (dynamic)	7.5 N
27	Max.force for press fits (static)	100 N
	(static, shaft supported)	2700 N
28	Max. radial loading, 5mm from flange	25 N
29	Number of pole pairs	7
30	Number of phases	3
31	Weight of motor	101 g

Operating Range

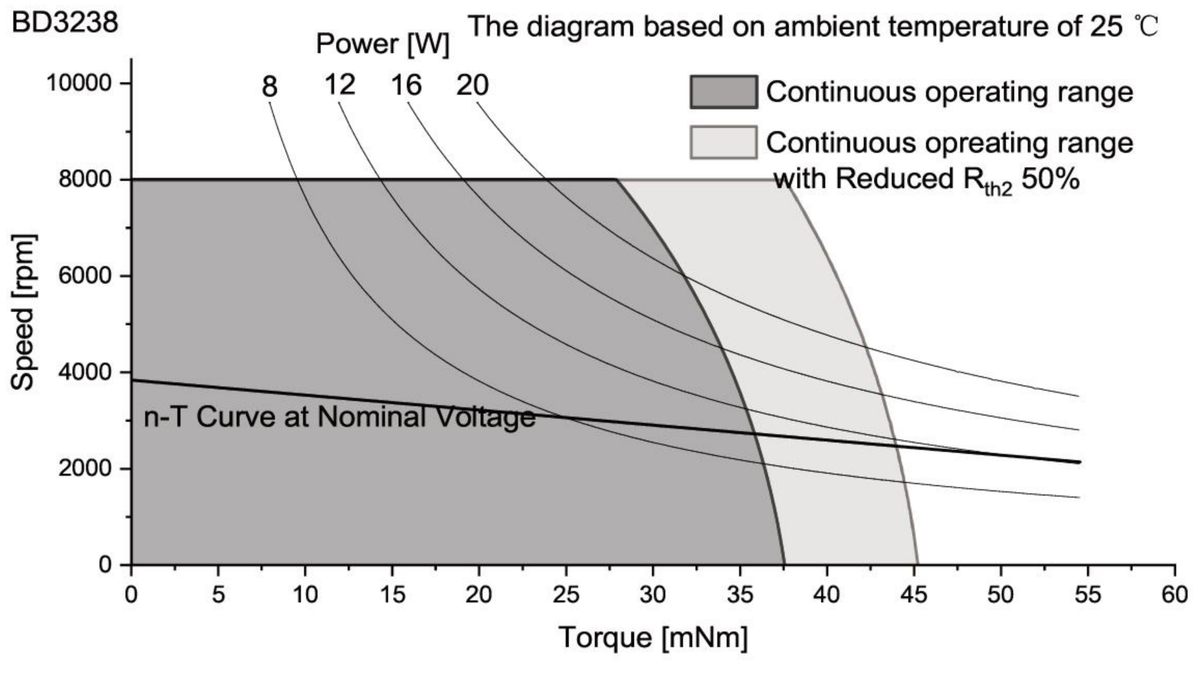

Controller features	
Sensor, Open loop, Imax < 2.2A	
Overload protection, Stall protection	
Max. temperature of electronics	+105℃

Connection

Conection

		PVC	
Pin 1	+VCC	AWG22	red
Pin 2	GND	AWG22	black

Caution:
Incorrect lead connection will damage the controller!

Configuration

Function: On&Off/Direction/Speed control/Brake
Speed closed&open-loop Control/Speed feedback
Performance: Customized in the continuous operating range
Ball bearing: Preload
Flange: Standard frange front&back/customize the frange
Shaft: Length/Diameter/Cut face
Leadwire: PVC/Silicon/Teflon/UL No/Dimension/length
Connector: JST/MOLEX/TE

More:
Please contact our sales engineers

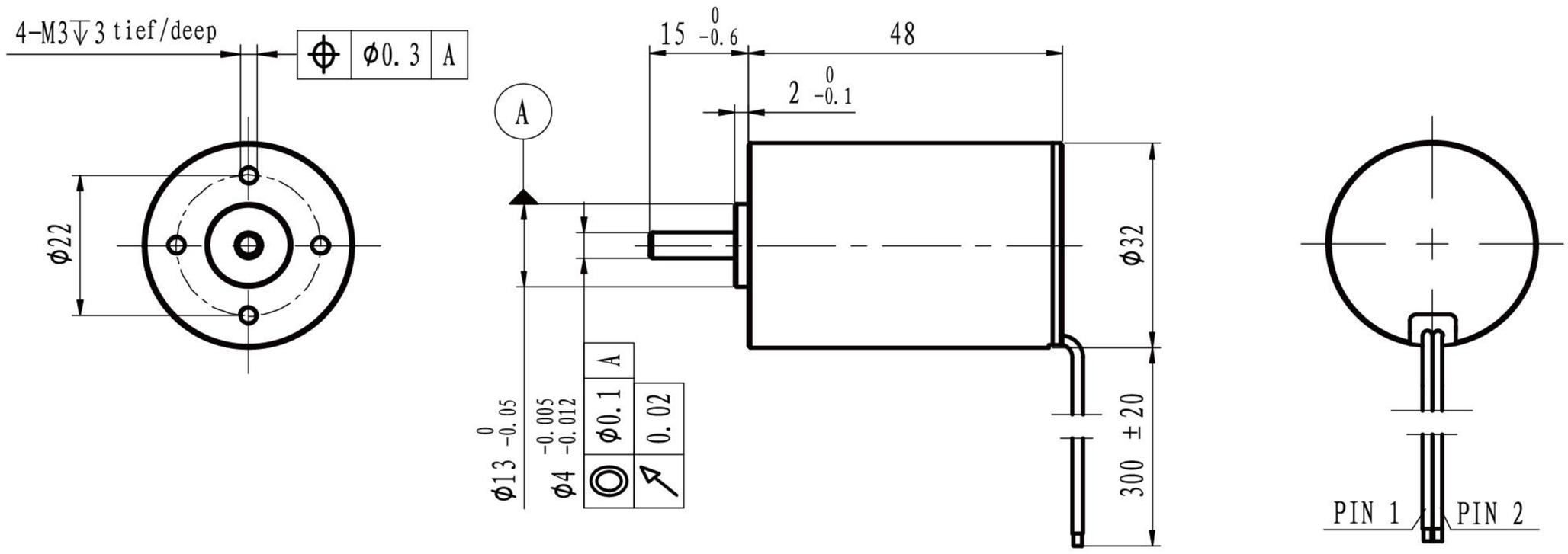

M 1:1.5

With hall sensor	BD3248S-…	1204	2404
Motor data			
Values at nominal voltage			
1 Nominal voltage	V	12	24
2 No load speed	rpm	3950	3978
3 No load current	mA	180	110
4 Nominal speed	rpm	3170	3299
5 Nominal torque	mNm	40	40
6 Nominal current	A	1.59	0.82
7 Stall torque	mNm	202.61	234.27
8 Stall current	A	7.34	4.28
9 Max. efficiency	%	71.1	70.5
10 Supply voltage +Vcc	V	10..28	10..28
11 Direction of ratation		CW	CW
12 Torque constant	mNm/A	28.30	56.13
13 Speed constant	rpm/V	337	170
14 Speed/torque gradient	rpm/mNm	19	17
15 Mechanical time constant	ms	3.2	2.8
16 Rotor inertia	gcm^2	15.5	15.5

17	Thermal resistance housing-ambient	8.2 K/W
18	Thermal resistance winding-housing	4.7 K/W
19	Thermal time constant winding	17 s
20	Thermal time constant motor	484 s
21	Ambient temprature	-30…+100℃
22	Max. permissible winding temperature	+150℃
23	Max. permissible speed	8000 rpm
24	Axial play at axial load <8 N	0 mm
	>8 N	max. 0.3 mm
25	Radial play	preloaded
26	Max. axial load (dynamic)	7.5 N
27	Max.force for press fits (static)	100 N
	(static, shaft supported)	2700 N
28	Max. radial loading, 5mm from flange	25 N
29	Number of pole pairs	7
30	Number of phases	3
31	Weight of motor	113 g

Operating Range

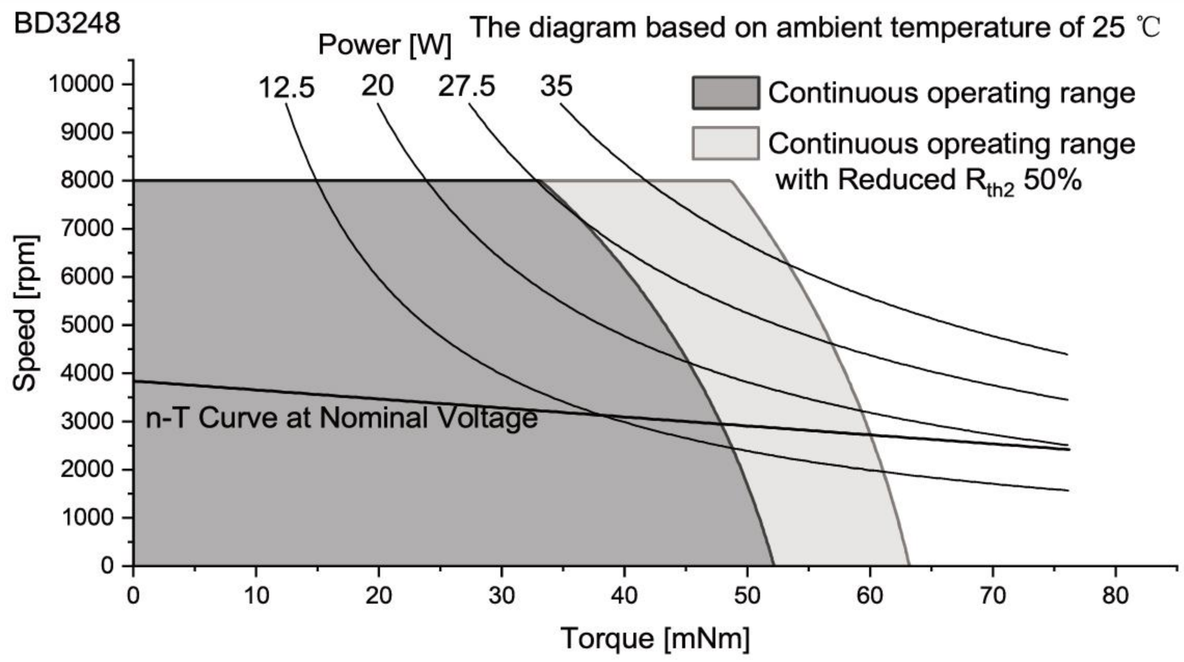

Controller features	
Sensor, Open loop, Imax < 2.2A	
Overload protection, Stall protection	
Max. temperature of electronics	+105℃

Connection

Conection		PVC	
Pin 1	+VCC	AWG22	red
Pin 2	GND	AWG22	black

Caution:
Incorrect lead connection will damage the controller!

Configuration

Function: On&Off/Direction/Speed control/Brake
Speed closed&open-loop Control/Speed feedback
Performance: Customized in the continuous operating range
Ball bearing: Preload
Flange: Standard frange front&back/customize the frange
Shaft: Length/Diameter/Cut face
Leadwire: PVC/Silicon/Teflon/UL No/Dimension/length
Connector: JST/MOLEX/TE

More:
Please contact our sales engineers

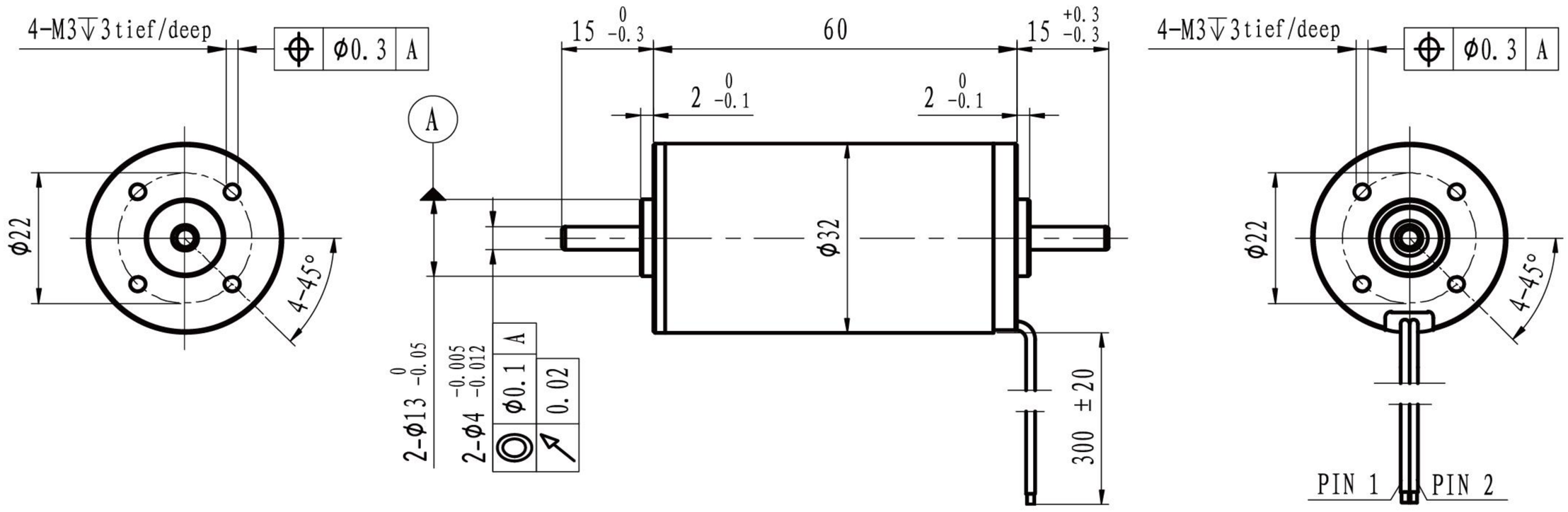

M 1:1.5

	With hall sensor	BD3260S-…	1204	2404
Motor data				
Values at nominal voltage				
1	Nominal voltage	V	12	24
2	No load speed	rpm	3650	3597
3	No load current	mA	190	100
4	Nominal speed	rpm	2914	3001
5	Nominal torque	mNm	45	45
6	Nominal current	A	1.66	0.82
7	Stall torque	mNm	223.24	271.47
8	Stall current	A	7.49	4.46
9	Max. efficiency	%	70.7	72.3
10	Supply voltage +Vcc	V	10..28	10..28
11	Direction of ratation		CW	CW
12	Torque constant	mNm/A	30.60	62.29
13	Speed constant	rpm/V	312	153
14	Speed/torque gradient	rpm/mNm	16	13
15	Mechanical time constant	ms	3.2	2.6
16	Rotor inertia	gcm^2	18.6	18.6

17	Thermal resistance housing-ambient	6.0 K/W
18	Thermal resistance winding-housing	1.9 K/W
19	Thermal time constant winding	19 s
20	Thermal time constant motor	435 s
21	Ambient temprature	-30…+100℃
22	Max. permissible winding temperature	+150℃
23	Max. permissible speed	8000 rpm
24	Axial play at axial load <8 N	0 mm
	>8 N	max. 0.3 mm
25	Radial play	preloaded
26	Max. axial load (dynamic)	7.5 N
27	Max.force for press fits (static)	100 N
	(static, shaft supported)	2700 N
28	Max. radial loading, 5mm from flange	25 N
29	Number of pole pairs	7
30	Number of phases	3
31	Weight of motor	150 g

Operating Range

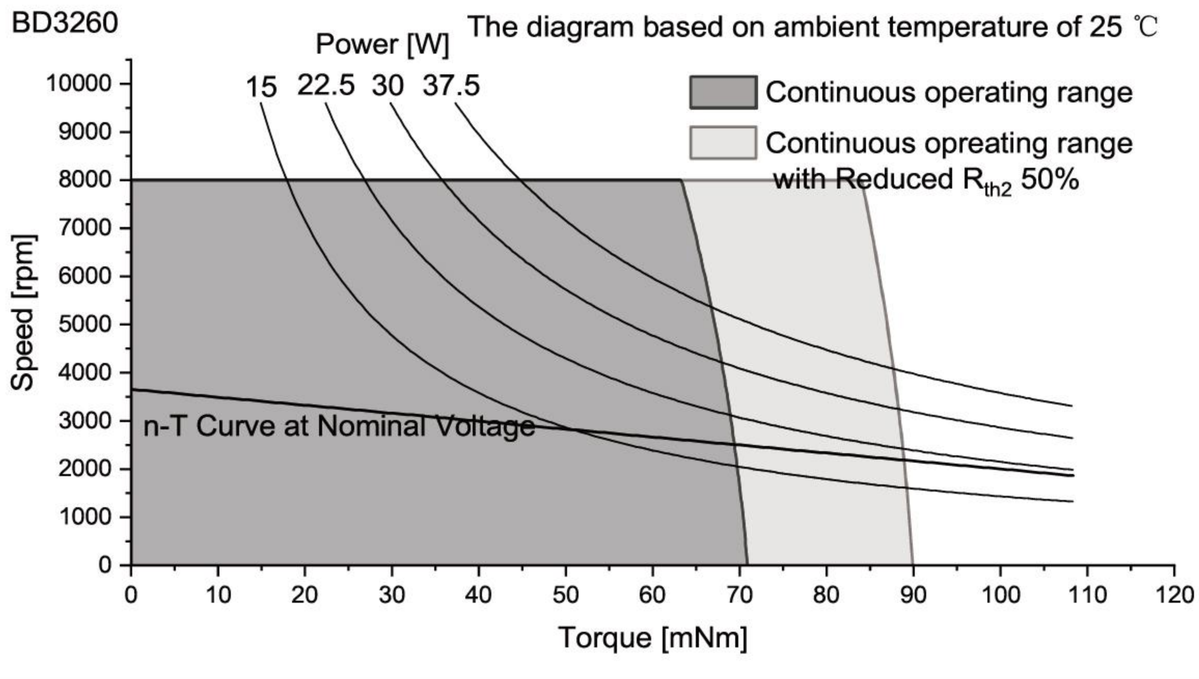

Controller features	
Sensor, Open loop, Imax < 2.2A	
Overload protection, Stall protection	
Max. temperature of electronics	+105℃

Connection

Conection

		PVC	
Pin 1	+VCC	AWG22	red
Pin 2	GND	AWG22	black

Caution:
Incorrect lead connection will damage the controller!

Configuration

Function: On&Off/Direction/Speed control/Brake
Speed closed&open-loop Control/Speed feedback
Performance: Customized in the continuous operating range
Ball bearing: Preload
Flange: Standard frange front&back/customize the frange
Shaft: Length/Diameter/Cut face
Leadwire: PVC/Silicon/Teflon/UL No/Dimension/length
Connector: JST/MOLEX/TE

More:
Please contact our sales engineers

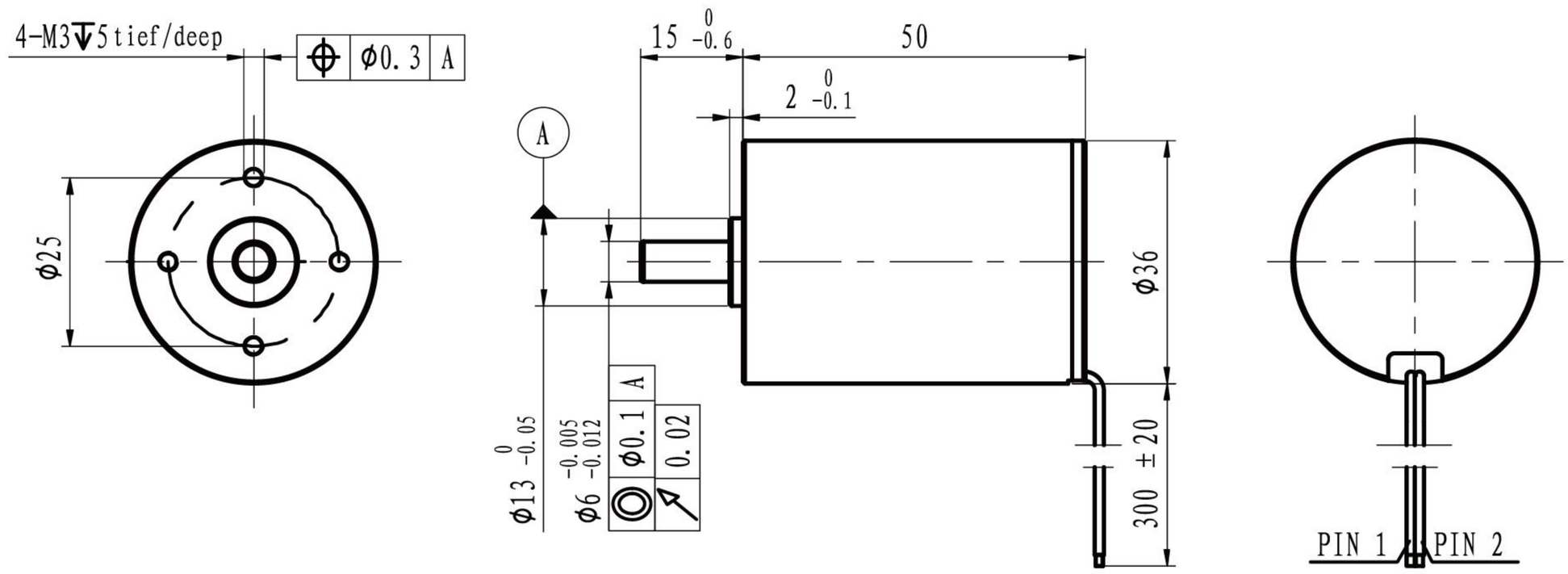

M 1:1.5

			With hall sensor	BD3650S-…	1204	2404
Motor data						
Values at nominal voltage						
1	Nominal voltage		V		12	24
2	No load speed		rpm		3621	3650
3	No load current		mA		180	100
4	Nominal speed		rpm		2864	3039
5	Nominal torque		mNm		50	50
6	Nominal current		A		1.80	0.91
7	Stall torque		mNm		239.07	298.92
8	Stall current		A		7.91	4.96
9	Max. efficiency		%		72.1	73.6
10	Supply voltage +Vcc		V		10..28	10..28
11	Direction of ratation				CW	CW
12	Torque constant		mNm/A		30.93	61.52
13	Speed constant		rpm/V		309	155
14	Speed/torque gradient		rpm/mNm		15	12
15	Mechanical time constant		ms		4.6	3.7
16	Rotor inertia		gcm^2		29.2	29.2

17	Thermal resistance housing-ambient		6.5 K/W
18	Thermal resistance winding-housing		3.6 K/W
19	Thermal time constant winding		45 s
20	Thermal time constant motor		630 s
21	Ambient temprature		-30…+100℃
22	Max. permissible winding temperature		+150℃
23	Max. permissible speed		8000 rpm
24	Axial play at axial load	<8 N	0 mm
		>8 N	max. 0.3 mm
25	Radial play		preloaded
26	Max. axial load (dynamic)		7.5 N
27	Max.force for press fits (static)		100 N
	(static, shaft supported)		2700 N
28	Max. radial loading, 5mm from flange		25 N
29	Number of pole pairs		6
30	Number of phases		3
31	Weight of motor		150 g

Operating Range

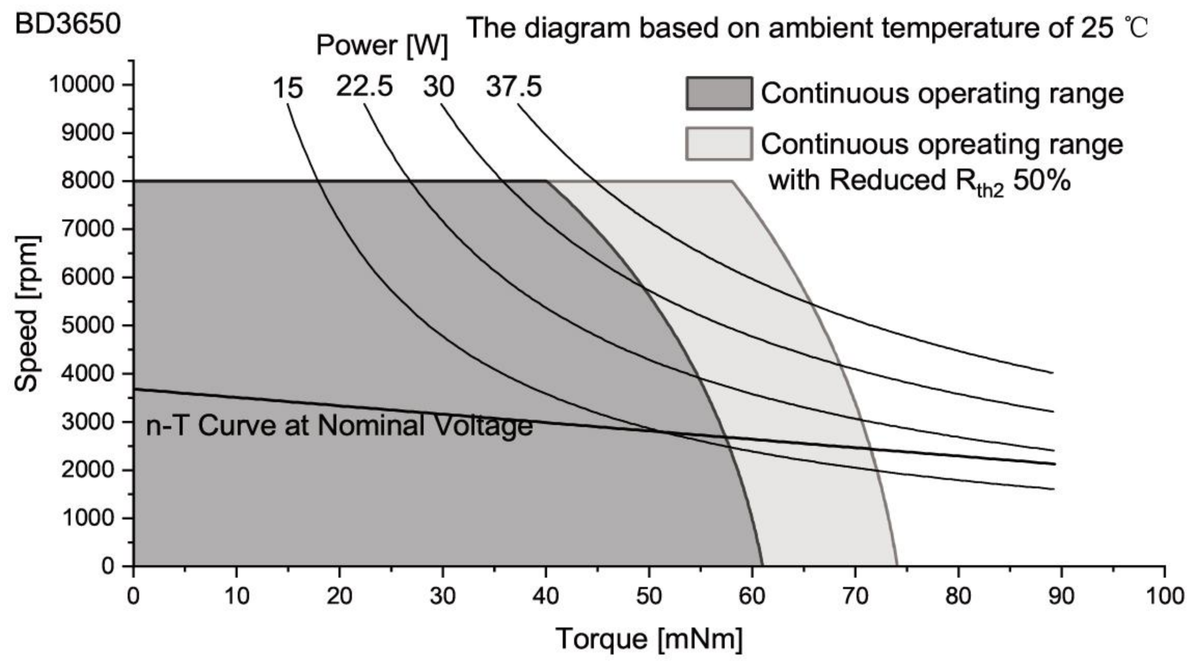

Controller features	
Sensor, Open loop, Imax < 4A	
Overload protection, Stall protection	
Max. temperature of electronics	+105℃

Connection

Conection

		PVC	
Pin 1	+VCC	AWG20	red
Pin 2	GND	AWG20	black

Caution:
Incorrect lead connection will damage the controller!

Configuration

Function: On&Off/Direction/Speed control/Brake
Speed closed&open-loop Control/Speed feedback
Performance: Customized in the continuous operating range
Ball bearing: Preload
Flange: Standard frange front&back/customize the frange
Shaft: Length/Diameter/Cut face
Leadwire: PVC/Silicon/Teflon/UL No/Dimension/length
Connector: JST/MOLEX/TE

More:
Please contact our sales engineers

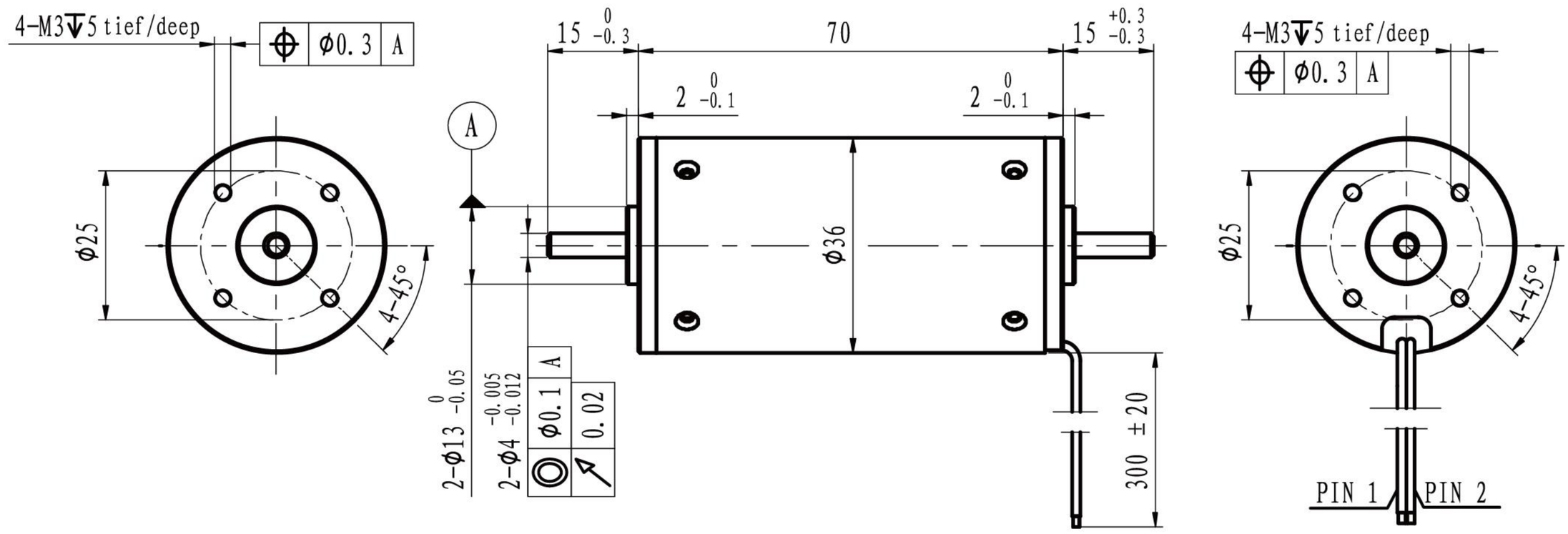

M 1:1.5

	With hall sensor	BD3670S-…	1204	2404
Motor data				
Values at nominal voltage				
1	Nominal voltage	V	12	24
2	No load speed	rpm	3700	3611
3	No load current	mA	180	100
4	Nominal speed	rpm	2751	2894
5	Nominal torque	mNm	60	60
6	Nominal current	A	2.16	1.06
7	Stall torque	mNm	233.97	302.15
8	Stall current	A	7.91	4.96
9	Max. efficiency	%	72.1	73.6
10	Supply voltage +Vcc	V	10..28	10..28
11	Direction of ratation		CW	CW
12	Torque constant	mNm/A	30.27	62.19
13	Speed constant	rpm/V	316	154
14	Speed/torque gradient	rpm/mNm	16	12
15	Mechanical time constant	ms	5.5	4.2
16	Rotor inertia	gcm^2	33.2	33.2

17	Thermal resistance housing-ambient	4.7 K/W
18	Thermal resistance winding-housing	2 K/W
19	Thermal time constant winding	46 s
20	Thermal time constant motor	816 s
21	Ambient temprature	-30…+100℃
22	Max. permissible winding temperature	+150℃
23	Max. permissible speed	8000 rpm
24	Axial play at axial load <8 N	0 mm
	>8 N	max. 0.3 mm
25	Radial play	preloaded
26	Max. axial load (dynamic)	7.5 N
27	Max.force for press fits (static)	100 N
	(static, shaft supported)	2700 N
28	Max. radial loading, 5mm from flange	25 N
29	Number of pole pairs	6
30	Number of phases	3
31	Weight of motor	196 g

Operating Range

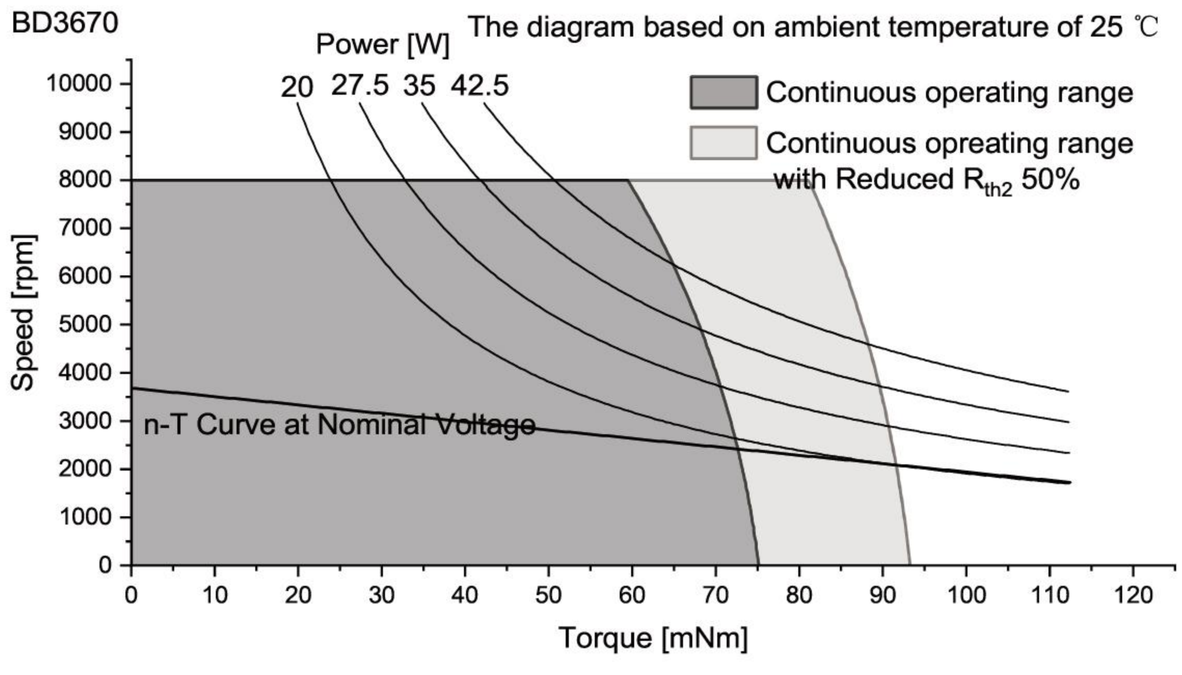

Controller features	
Sensor, Open loop, Imax < 4A	
Overload protection, Stall protection	
Max. temperature of electronics	+105℃

Connection

Conection		PVC	
Pin 1	+VCC	AWG20	red
Pin 2	GND	AWG20	black

Caution:
Incorrect lead connection will damage the controller!

Configuration

Function: On&Off/Direction/Speed control/Brake
Speed closed&open-loop Control/Speed feedback
Performance: Customized in the continuous operating range
Ball bearing: Preload
Flange: Standard frange front&back/customize the frange
Shaft: Length/Diameter/Cut face
Leadwire: PVC/Silicon/Teflon/UL No/Dimension/length
Connector: JST/MOLEX/TE

More:
Please contact our sales engineers

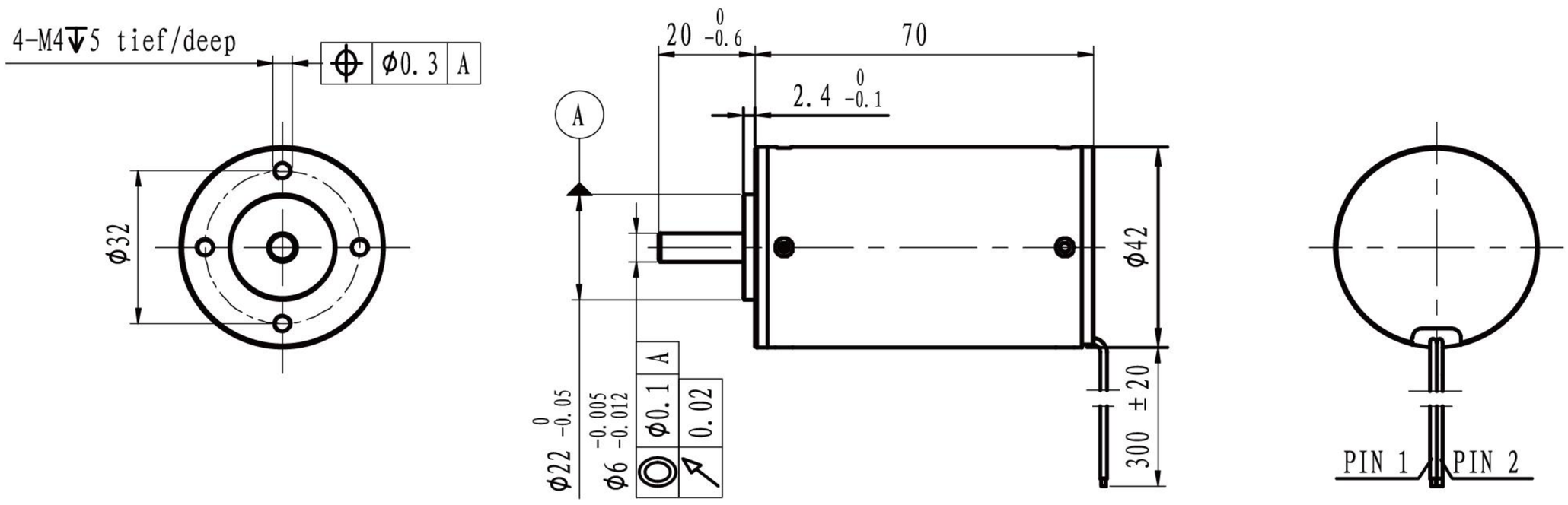

M 1:2

			With hall sensor	BD4270S-…	1204	2404						
Motor data												
Values at nominal voltage												
1	Nominal voltage			V	12	24						
2	No load speed			rpm	3878	3912						
3	No load current			mA	260	180						
4	Nominal speed			rpm	3154	3550						
5	Nominal torque			mNm	80	80						
6	Nominal current			A	3.02	1.56						
7	Stall torque			mNm	428.23	863.89						
8	Stall current			A	15.01	15.10						
9	Max. efficiency			%	75.4	79.4						
10	Supply voltage +Vcc			V	10..28	10..28						
11	Direction of ratation				CW	CW						
12	Torque constant			mNm/A	29.04	57.89						
13	Speed constant			rpm/V	329	165						
14	Speed/torque gradient			rpm/mNm	9	5						
15	Mechanical time constant			ms	3.7	1.9						
16	Rotor inertia			gcm^2	39.3	39.3						

17	Thermal resistance housing-ambient		4.2 K/W
18	Thermal resistance winding-housing		1.4 K/W
19	Thermal time constant winding		12 s
20	Thermal time constant motor		623 s
21	Ambient temprature		-30…+100℃
22	Max. permissible winding temperature		+150℃
23	Max. permissible speed		8000 rpm
24	Axial play at axial load	<8 N	0 mm
		>8 N	max. 0.3 mm
25	Radial play		preloaded
26	Max. axial load (dynamic)		7.5 N
27	Max.force for press fits (static)		100 N
	(static, shaft supported)		2700 N
28	Max. radial loading, 5mm from flange		25 N
29	Number of pole pairs		3
30	Number of phases		3
31	Weight of motor		313 g

Operating Range

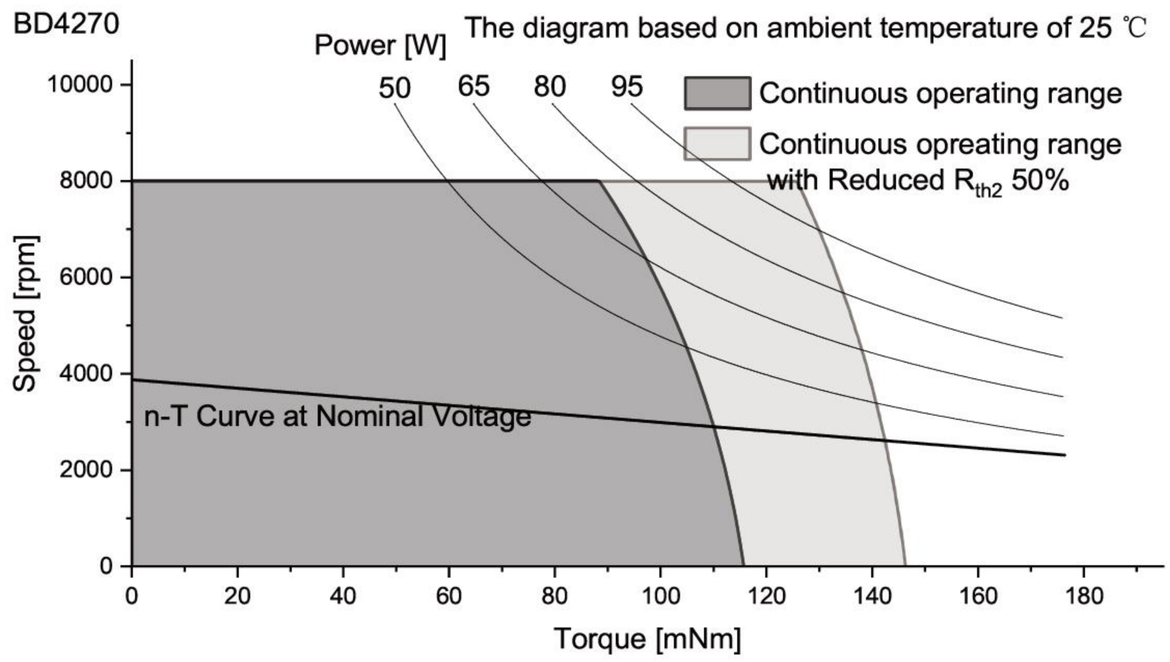

Controller features		
	Sensor, Open loop, Imax < 4A	
	Overload protection, Stall protection	
	Max. temperature of electronics	+105℃

Connection

Conection		PTFE		
	Pin 1	+VCC	AWG20	red
	Pin 2	GND	AWG20	black

Caution:
Incorrect lead connection will damage the controller!

Configuration

Function: On&Off/Direction/Speed control/Brake
Speed closed&open-loop Control/Speed feedback
Performance: Customized in the continuous operating range
Ball bearing: Preload
Flange: Standard frange front&back/customize the frange
Shaft: Length/Diameter/Cut face
Leadwire: PVC/Silicon/Teflon/UL No/Dimension/length
Connector: JST/MOLEX/TE

More:
Please contact our sales engineers

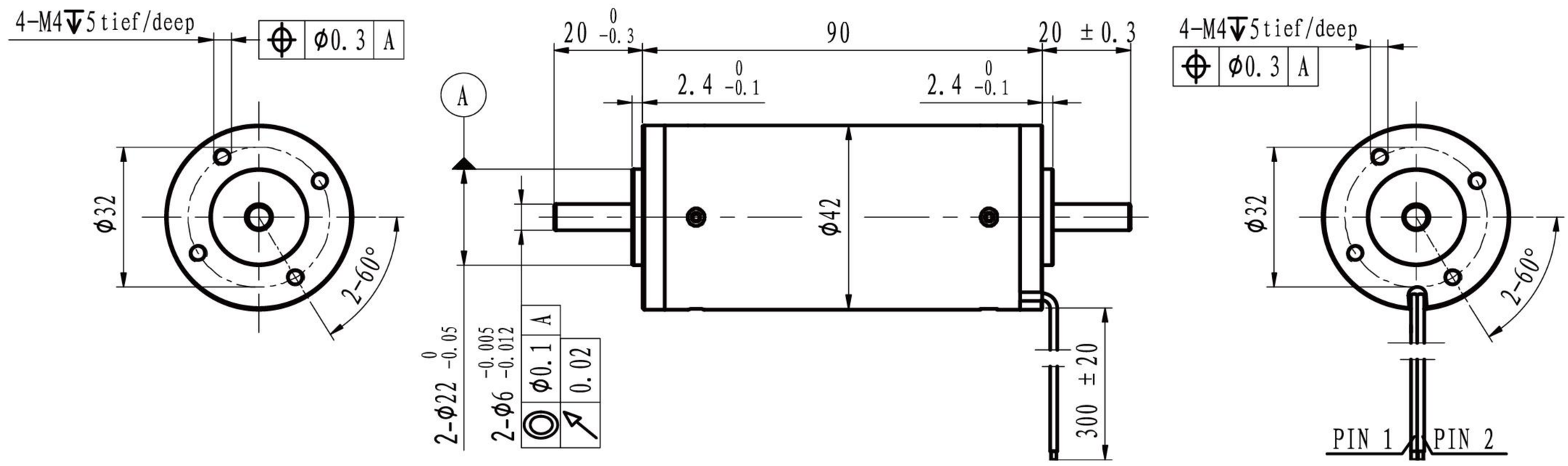

M 1:2

	With hall sensor	BD4290S-…	1204	2404						
Motor data										
Values at nominal voltage										
1	Nominal voltage	V	12	24						
2	No load speed	rpm	3920	3980						
3	No load current	mA	260	180						
4	Nominal speed	rpm	3087	3522						
5	Nominal torque	mNm	100	100						
6	Nominal current	A	3.74	1.94						
7	Stall torque	mNm	470.78	869.29						
8	Stall current	A	16.62	15.45						
9	Max. efficiency	%	76.5	79.6						
10	Supply voltage +Vcc	V	10..28	10..28						
11	Direction of ratation		CW	CW						
12	Torque constant	mNm/A	28.78	56.91						
13	Speed constant	rpm/V	332	168						
14	Speed/torque gradient	rpm/mNm	8	5						
15	Mechanical time constant	ms	3.9	2.2						
16	Rotor inertia	gcm^2	45.1	45.1						

17	Thermal resistance housing-ambient	3.5 K/W
18	Thermal resistance winding-housing	0.9 K/W
19	Thermal time constant winding	14 s
20	Thermal time constant motor	690
21	Ambient temprature	-30…+100℃
22	Max. permissible winding temperature	+150℃
23	Max. permissible speed	8000 rpm
24	Axial play at axial load <8 N	0 mm
	>8 N	max. 0.3 mm
25	Radial play	preloaded
26	Max. axial load (dynamic)	7.5 N
27	Max.force for press fits (static)	100 N
	(static, shaft supported)	2700 N
28	Max. radial loading, 5mm from flange	25 N
29	Number of pole pairs	1
30	Number of phases	3
31	Weight of motor	366 g

Operating Range

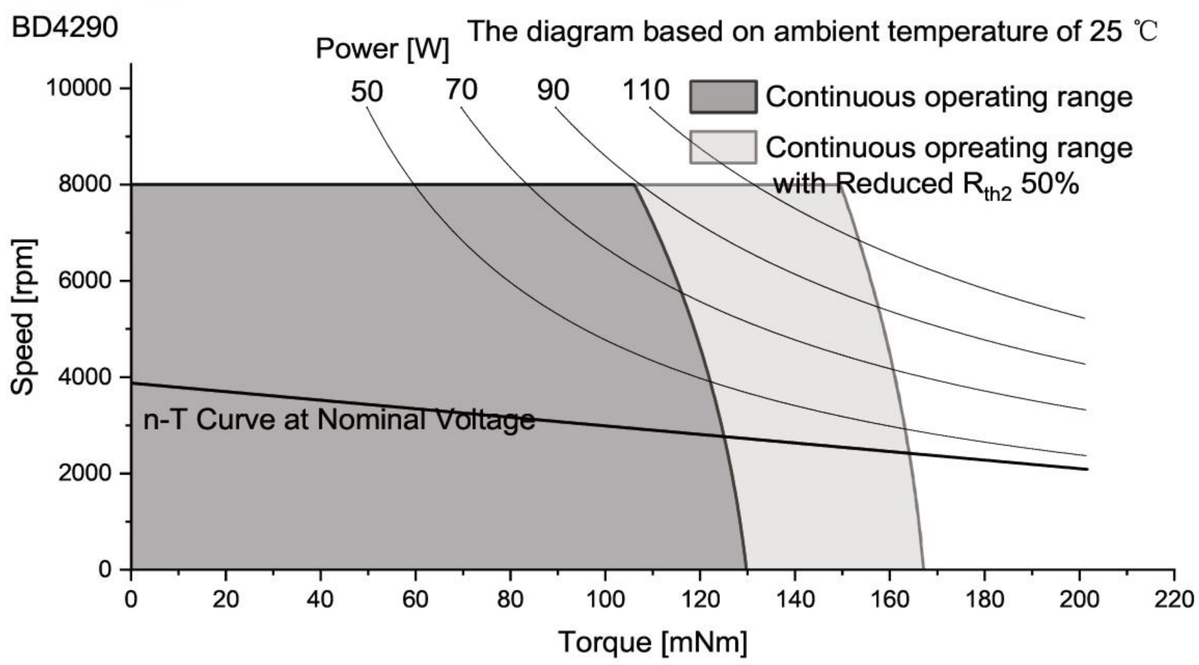

Controller features

Sensor, Open loop, Imax < 4A
Overload protection, Stall protection
Max. temperature of electronics +105℃

Connection

Conection

		PTFE	
Pin 1	+VCC	AWG20	red
Pin 2	GND	AWG20	black

Caution:
Incorrect lead connection will damage the controller!

Configuration

Function: On&Off/Direction/Speed control/Brake
Speed closed&open-loop Control/Speed feedback
Performance: Customized in the continuous operating range
Ball bearing: Preload
Flange: Standard frange front&back/customize the frange
Shaft: Length/Diameter/Cut face
Leadwire: PVC/Silicon/Teflon/UL No/Dimension/length
Connector: JST/MOLEX/TE

More:
Please contact our sales engineers

SLOTTED BLDC MOTOR

BF Series

External rotor structure
Electronics integrated

Model	Dimension (mm)	Nominal Troque (mNm)	Nominal Speed (rpm)	Page
BF3242	Φ32x42	32	3500	104
BF4253	Φ42x53	70	3500	105
BF5031	Φ50x31	30	3500	106
BF5032	Φ50x32	40	5500	107
BF5434	Φ54x34	90	3500	108
BF6862	Φ68x62	200	2500	109

SLOTTED BLDC MOTOR

BF Series

External rotor structure &Electronics integrated

Thanks to the outrunner design, this series has the characteristics of high torque,good stability and compact structure. Its design allows for a larger rotor diameter that produces higher torque while the rotor mass is distributed externally, running smoothly with low vibration and noise. The external rotor is directly exposed to the environment, which helps dissipate heat and improves the durability and reliability of the motor.
Another feature of the series is the integrated controller, which simplifies system design, reduces external wiring and components, and makes the overall structure more compact. Maintenance process also reduces operating time and maintenance costs.

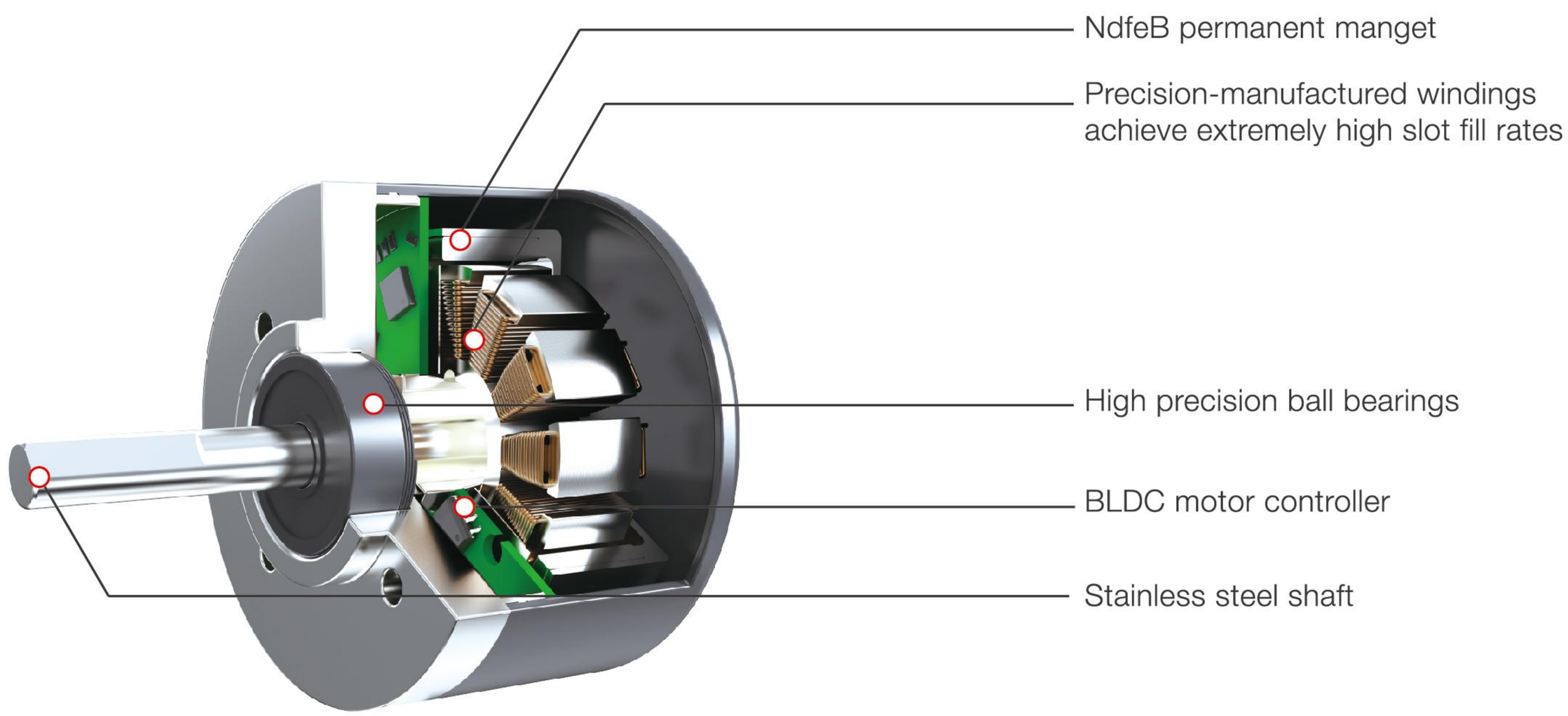

Basic Data:
Diameter: φ32mm-68mmm
Maximum Length: 72mm
Operate Voltage: 4.5V-24VDC
Maximum Permissiblespeed: 10,000rpm
Operate temperature: -30°C-+80°C

Typical features:
Electronics integrated
Cost effective
Large starting torque
Low noise
Good heat dissipation
Long operational lifetime
Customizable

I/O Schematics

Speed command input

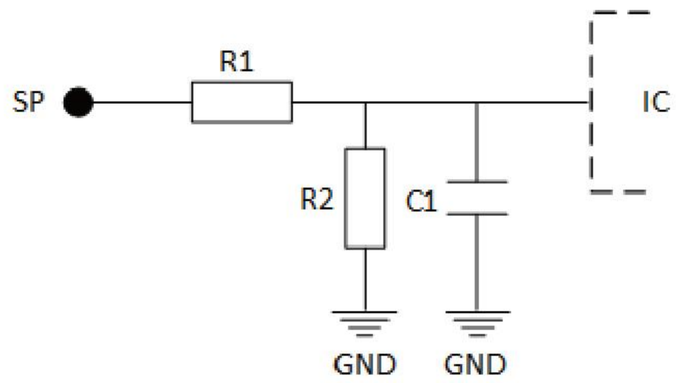

Speed output

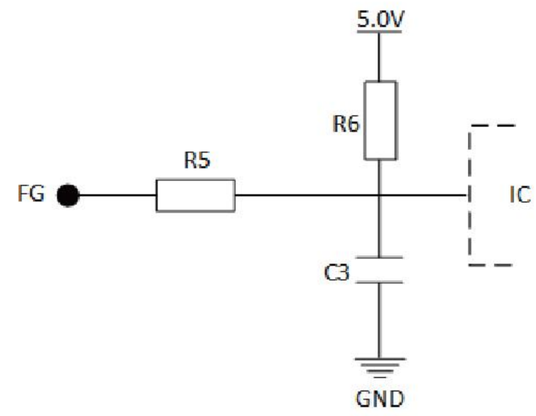

Direction command input

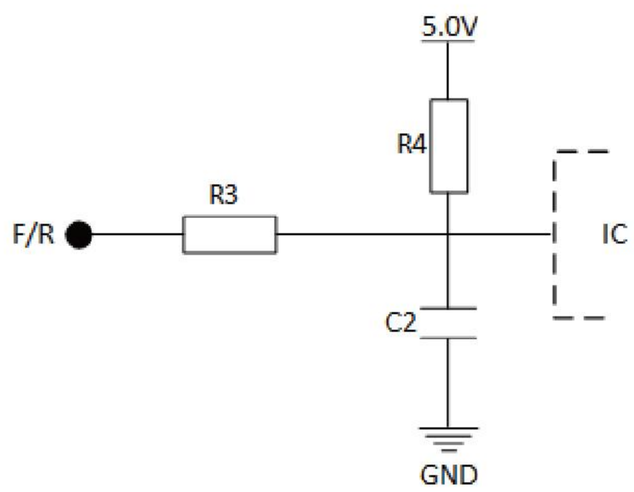

Speed output signal

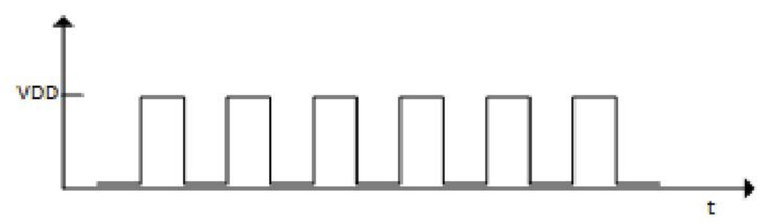

Electrical Connections

Version	Description	
5-Wire	1	Power supply
	2	GND
	3	Speed command input(SP)
	4	Dirction command input(F/R)
	5	Speed signal output (FG)

ECD12 and ECD16, because these two models use integrated chips. The built-in series product interface is configured up to five wires, with three function pins, namely speed control SP(compatible with analog voltage PWM duty cycle control, PWM frequency range of 10KHZ-35KHZ, 5V TTL level), forward and reverse control F/R(CCW operation by connecting ground),speed feedback output FG (one pulse perturn). If you need enable and brake functions, you need to replace the two functions among three function pins above.

Please note that the standard products in the catalog are two-wire,only power and ground wires

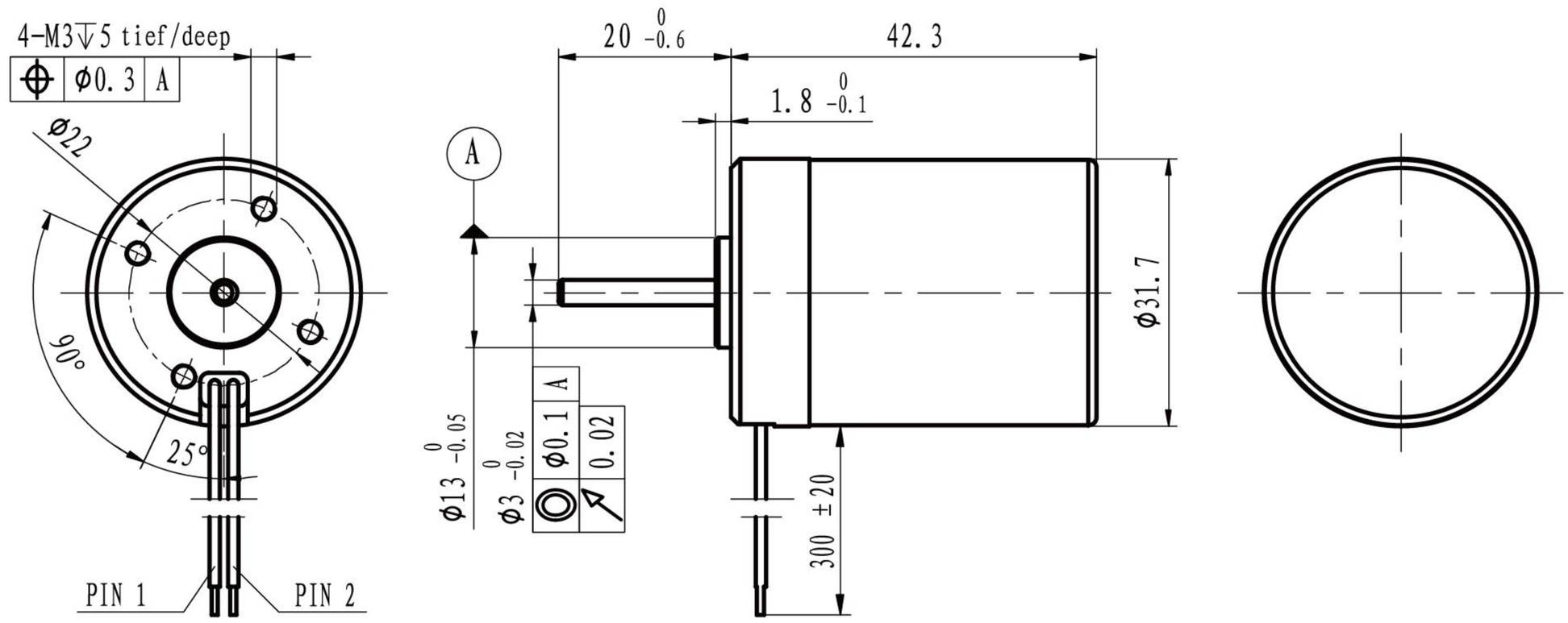

M 1:1.2

			With hall sensor	BF3242S-…	1204	2404
Motor data						
Values at nominal voltage						
1	Nominal voltage			V	12	24
2	No load speed			rpm	4090	4064
3	No load current			mA	140	80
4	Nominal speed			rpm	3560	3569
5	Nominal torque			mNm	32	32
6	Nominal current			A	1.30	0.66
7	Stall torque			mNm	246.92	262.83
8	Stall current			A	9.09	4.82
9	Max. efficiency			%	76.7	75.9
10	Supply voltage +Vcc			V	10..28	10..28
11	Direction of ratation				CW	CW
12	Torque constant			mNm/A	27.59	55.46
13	Speed constant			rpm/V	346	172
14	Speed/torque gradient			rpm/mNm	17	15
15	Mechanical time constant			ms	12.6	11.8
16	Rotor inertia			gcm^2	72.7	72.7
17	Thermal resistance housing-ambient			13 K/W		
18	Thermal resistance winding-housing			5 K/W		
19	Thermal time constant winding			32 s		
20	Thermal time constant motor			540 s		
21	Ambient temprature			-30…+100℃		
22	Max. permissible winding temperature			+150℃		
23	Max. permissible speed			8000 rpm		
24	Axial play at axial load	<8 N		0 mm		
		>8 N		max. 0.3 mm		
25	Radial play			preloaded		
26	Max. axial load (dynamic)			7.5 N		
27	Max.force for press fits (static)			100 N		
	(static, shaft supported)			2700 N		
28	Max. radial loading, 5mm from flange			25 N		
29	Number of pole pairs			8		
30	Number of phases			3		
31	Weight of motor			120 g		

Operating Range

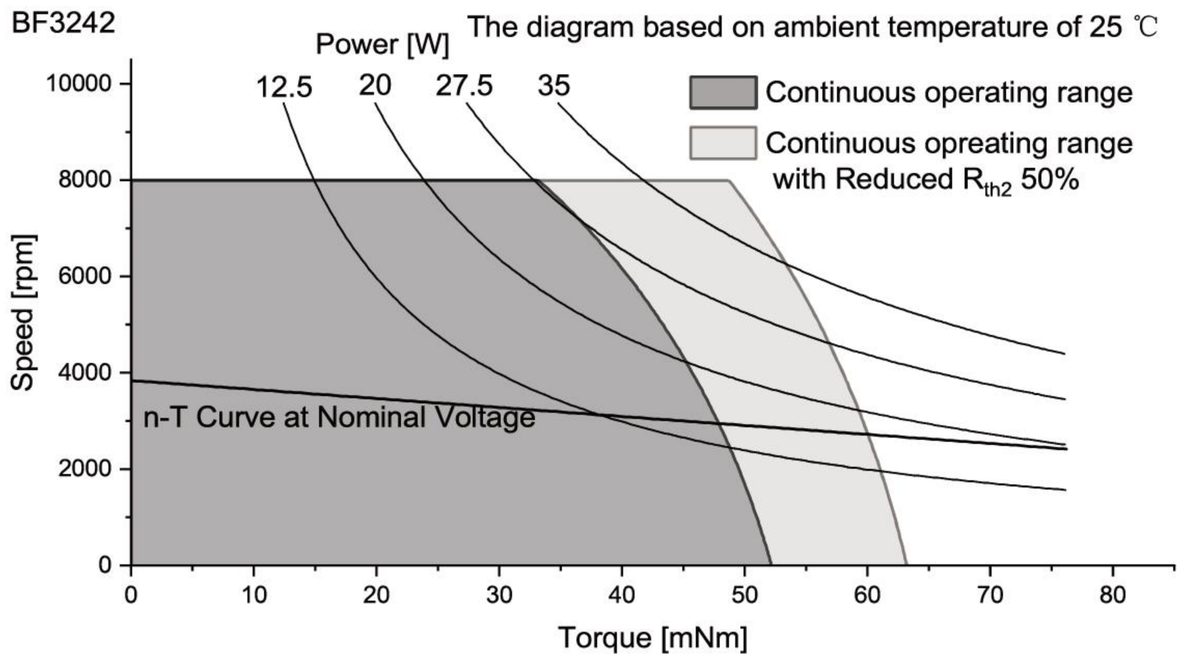

Controller features	
Sensor, Open loop, Imax < 2.2A	
Overload protection, Stall protection	
Max. temperature of electronics	+105℃

Connection

Conection		PVC	
Pin 1	+VCC	AWG20	red
Pin 2	GND	AWG20	black

Caution:
Incorrect lead connection will damage the controller!

Configuration

Function: On&Off/Direction/Speed control/Brake
Speed closed&open-loop Control/Speed feedback
Performance: Customized in the continuous operating range
Ball bearing: Preload
Flange: Standard frange front&back/customize the frange
Shaft: Length/Diameter/Cut face
Leadwire: PVC/Silicon/Teflon/UL No/Dimension/length
Connector: JST/MOLEX/TE

More:
Please contact our sales engineers

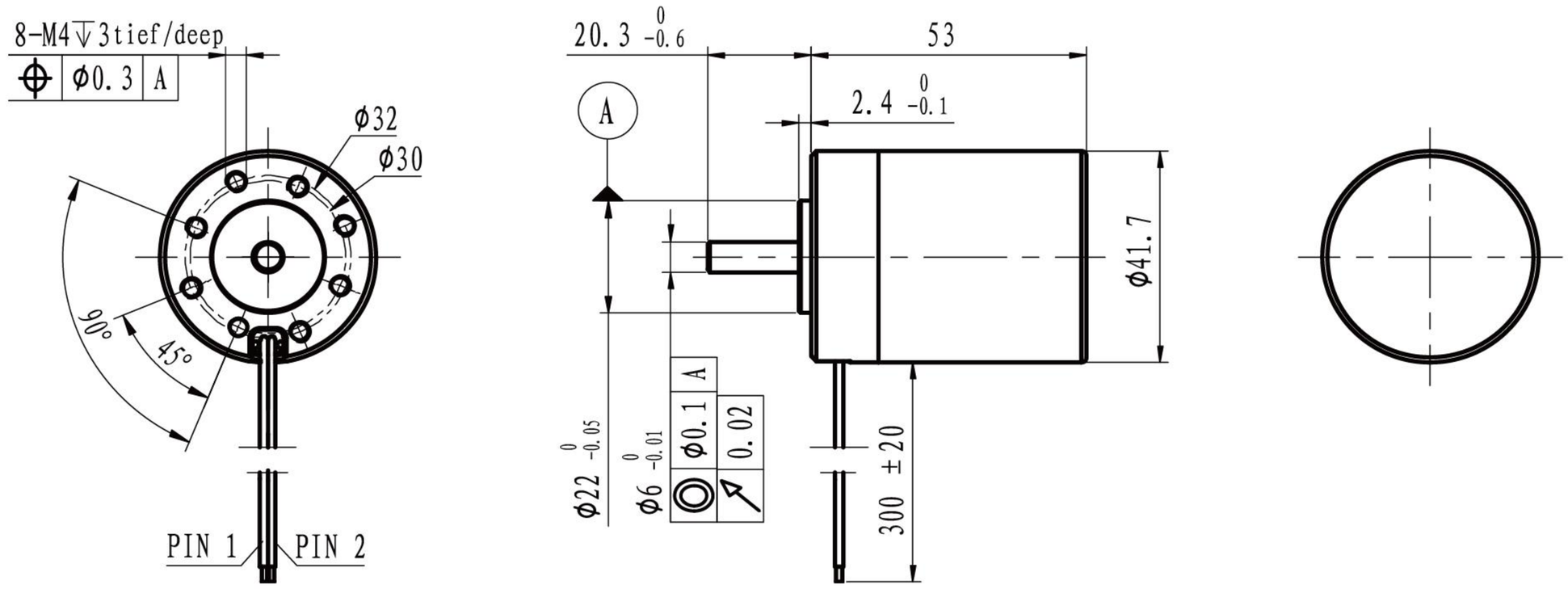

M 1:2

	With hall sensor	BF4253S-…	1204	2404
Motor data				
Values at nominal voltage				
1	Nominal voltage	V	12	24
2	No load speed	rpm	4023	4017
3	No load current	mA	350	200
4	Nominal speed	rpm	3616	3610
5	Nominal torque	mNm	70	70
6	Nominal current	A	2.84	1.45
7	Stall torque	mNm	692.30	690.53
8	Stall current	A	25.00	12.50
9	Max. efficiency	%	77.7	76.3
10	Supply voltage +Vcc	V	10..28	10..28
11	Direction of ratation		CW	CW
12	Torque constant	mNm/A	28.09	56.14
13	Speed constant	rpm/V	340	170
14	Speed/torque gradient	rpm/mNm	6	6
15	Mechanical time constant	ms	8.9	8.9
16	Rotor inertia	gcm^2	146.4	146.4

17	Thermal resistance housing-ambient	5.0 K/W
18	Thermal resistance winding-housing	3.6 K/W
19	Thermal time constant winding	17 s
20	Thermal time constant motor	630 s
21	Ambient temprature	-30…+100℃
22	Max. permissible winding temperature	+150℃
23	Max. permissible speed	8000 rpm
24	Axial play at axial load <8 N	0 mm
	>8 N	max. 0.3 mm
25	Radial play	preloaded
26	Max. axial load (dynamic)	7.5 N
27	Max.force for press fits (static)	100 N
	(static, shaft supported)	2700 N
28	Max. radial loading, 5mm from flange	25 N
29	Number of pole pairs	7
30	Number of phases	3
31	Weight of motor	215 g

Operating Range

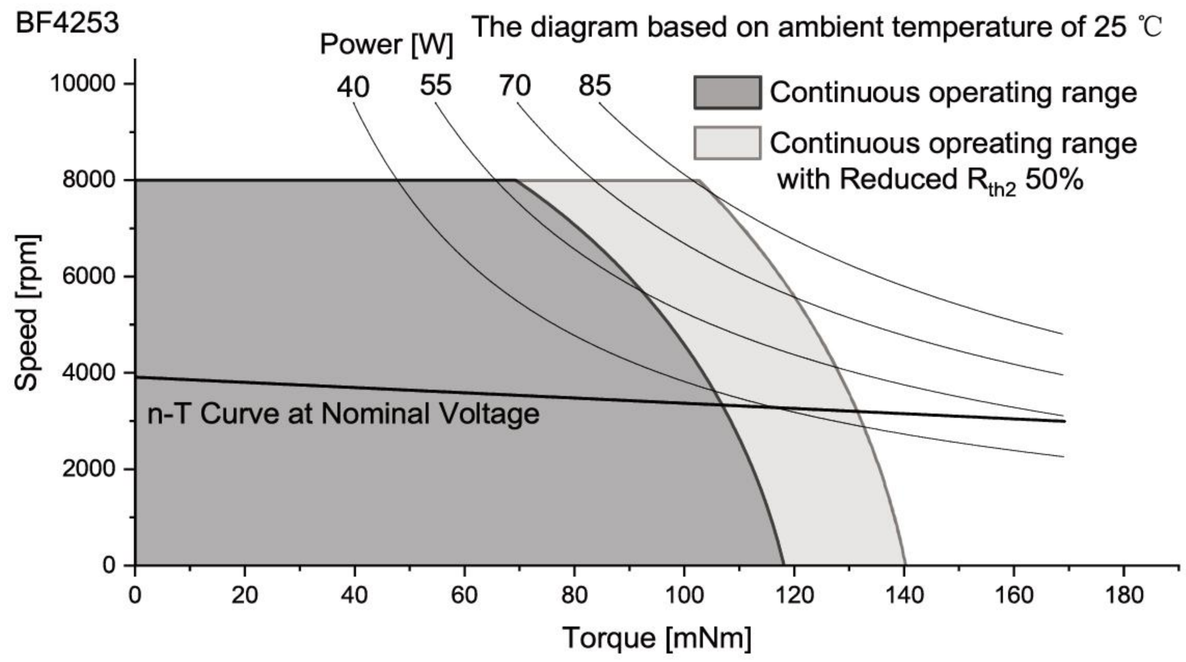

Controller features	
Sensor, Open loop, Imax < 4A	
Overload protection, Stall protection	
Max. temperature of electronics	+105℃

Connection

Conection		PVC	
Pin 1	+VCC	AWG20	red
Pin 2	GND	AWG20	black

Caution:
Incorrect lead connection will damage the controller!

Configuration

Function: On&Off/Direction/Speed control/Brake
Speed closed&open-loop Control/Speed feedback
Performance: Customized in the continuous operating range
Ball bearing: Preload
Flange: Standard frange front&back/customize the frange
Shaft: Length/Diameter/Cut face
Leadwire: PVC/Silicon/Teflon/UL No/Dimension/length
Connector: JST/MOLEX/TE

More:
Please contact our sales engineers

BF series. Outer Rotor BLDC Motor with int. controller

BF5031, Φ50mmX31mm

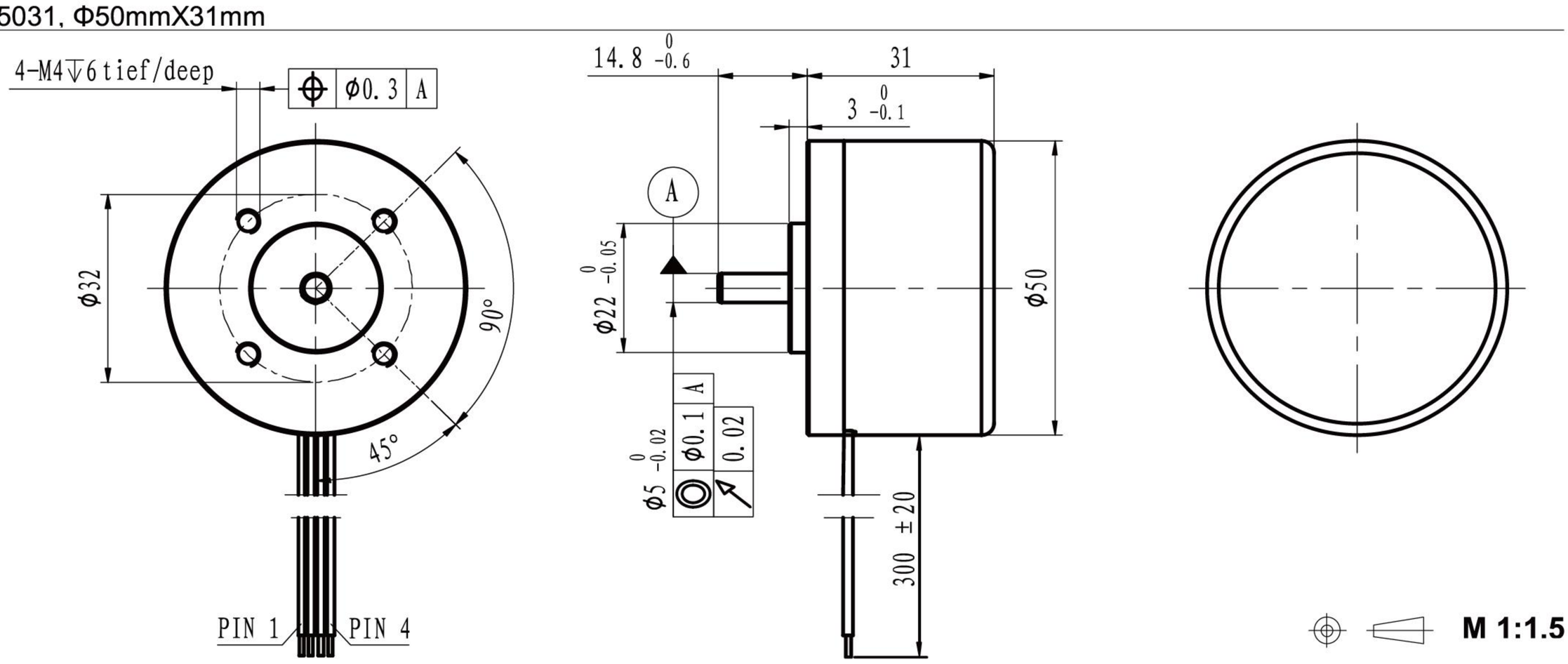

With hall sensor	BF5031S-…	1204	2404
Motor data			
Values at nominal voltage			
1 Nominal voltage	V	12	24
2 No load speed	rpm	4038	4021
3 No load current	mA	170	90
4 Nominal speed	rpm	3747	3521
5 Nominal torque	mNm	30	30
6 Nominal current	A	1.24	0.63
7 Stall torque	mNm	416.08	241.30
8 Stall current	A	15.00	4.41
9 Max. efficiency	%	79.8	73.5
10 Supply voltage +Vcc	V	10..28	10..28
11 Direction of ratation		CW	CW
12 Torque constant	mNm/A	28.06	55.83
13 Speed constant	rpm/V	340	171
14 Speed/torque gradient	rpm/mNm	10	17
15 Mechanical time constant	ms	8.8	15.2
16 Rotor inertia	gcm^2	87	87

17 Thermal resistance housing-ambient		8.9 K/W
18 Thermal resistance winding-housing		6.9 K/W
19 Thermal time constant winding		22.5 s
20 Thermal time constant motor		508 s
21 Ambient temprature		-30…+100℃
22 Max. permissible winding temperature		+150℃
23 Max. permissible speed		8000 rpm
24 Axial play at axial load	<8 N	0 mm
	>8 N	max. 0.3 mm
25 Radial play		preloaded
26 Max. axial load (dynamic)		7.5 N
27 Max.force for press fits (static)		100 N
(static, shaft supported)		2700 N
28 Max. radial loading, 5mm from flange		25 N
29 Number of pole pairs		5
30 Number of phases		3
31 Weight of motor		108 g

Controller features	
Sensor, Open loop, Imax < 4A	
Overload protection, Stall protection	
Max. temperature of electronics	+105℃

Connection

Conection	PVC	
Pin 1 +VCC	AWG24	red
Pin 2 GND	AWG24	black
Pin 1 SP	AWG24	blue
Pin 2 FG	AWG24	yellow

Caution:
Incorrect lead connection will damage the controller!

Operating Range

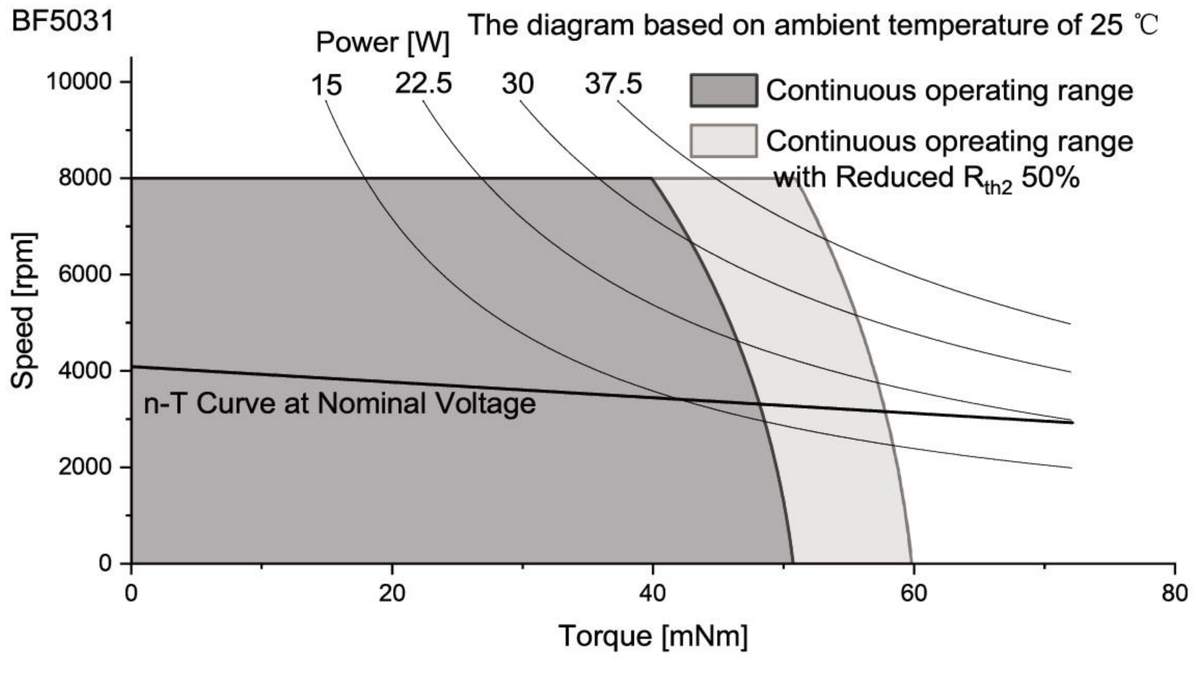

Configuration

Function: On&Off/Direction/Speed control/Brake
Speed closed&open-loop Control/Speed feedback
Performance: Customized in the continuous operating range
Ball bearing: Preload
Flange: Standard frange front&back/customize the frange
Shaft: Length/Diameter/Cut face
Leadwire: PVC/Silicon/Teflon/UL No/Dimension/length
Connector: JST/MOLEX/TE

More:
Please contact our sales engineers

BF series. Outer Rotor BLDC Motor with int. controller

BF5032, Φ50mmX31.5mm

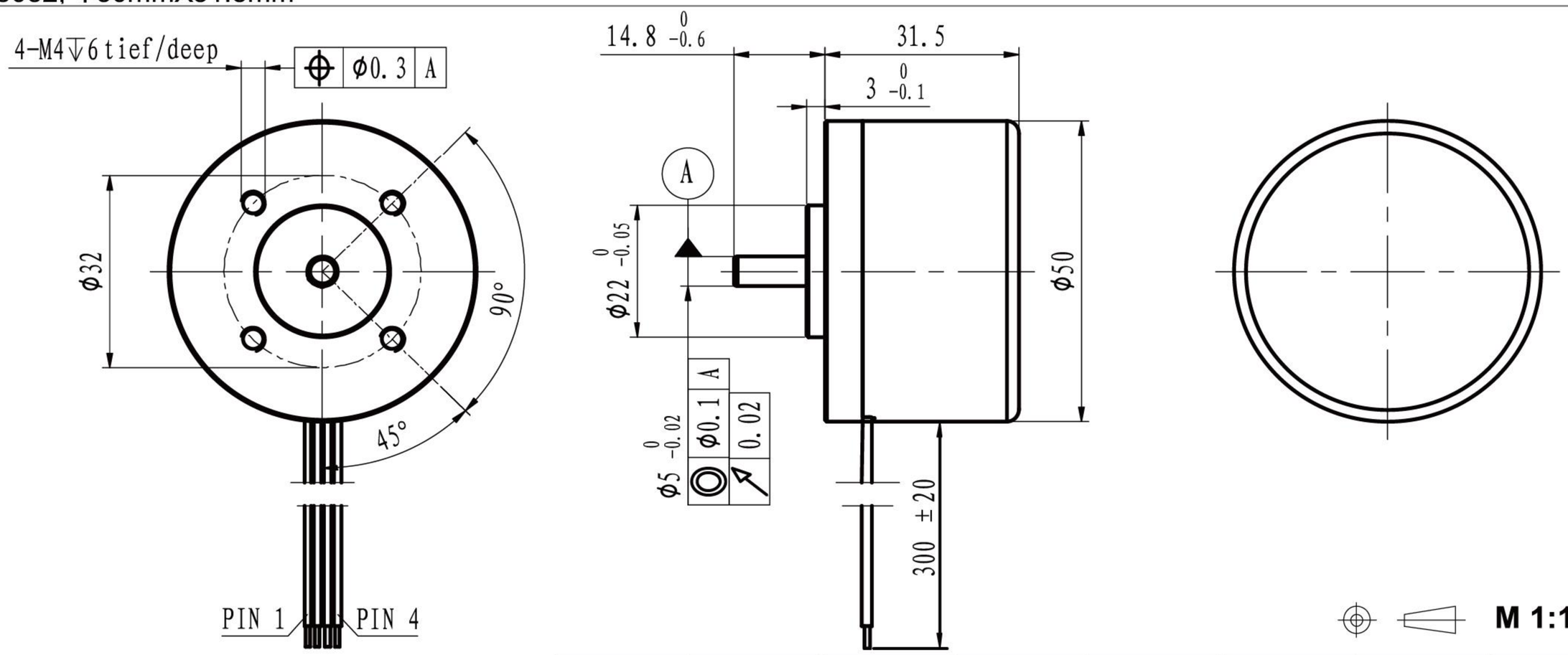

			With hall sensor	BF5032S-…	1204	2406
Motor data						
Values at nominal voltage						
1	Nominal voltage		V		12	24
2	No load speed		rpm		5998	6070
3	No load current		mA		400	220
4	Nominal speed		rpm		5678	5794
5	Nominal torque		mNm		40	40
6	Nominal current		A		2.51	1.29
7	Stall torque		mNm		748.99	880.65
8	Stall current		A		40.00	23.76
9	Max. efficiency		%		81.0	81.7
10	Supply voltage +Vcc		V		10..28	10..28
11	Direction of ratation				CW	CW
12	Torque constant		mNm/A		18.91	37.41
13	Speed constant		rpm/V		505	255
14	Speed/torque gradient		rpm/mNm		8	7
15	Mechanical time constant		ms		8.0	6.9
16	Rotor inertia		gcm^2		95	95
17	Thermal resistance housing-ambient		8.3 K/W			
18	Thermal resistance winding-housing		3.6 K/W			
19	Thermal time constant winding		15 s			
20	Thermal time constant motor		675 s			
21	Ambient temprature		-30…+100℃			
22	Max. permissible winding temperature		+150℃			
23	Max. permissible speed		8000 rpm			
24	Axial play at axial load	<8 N	0 mm			
		>8 N	max. 0.3 mm			
25	Radial play		preloaded			
26	Max. axial load (dynamic)		7.5 N			
27	Max.force for press fits (static)		100 N			
	(static, shaft supported)		2700 N			
28	Max. radial loading, 5mm from flange		25 N			
29	Number of pole pairs		5			
30	Number of phases		3			
31	Weight of motor		175 g			

Operating Range

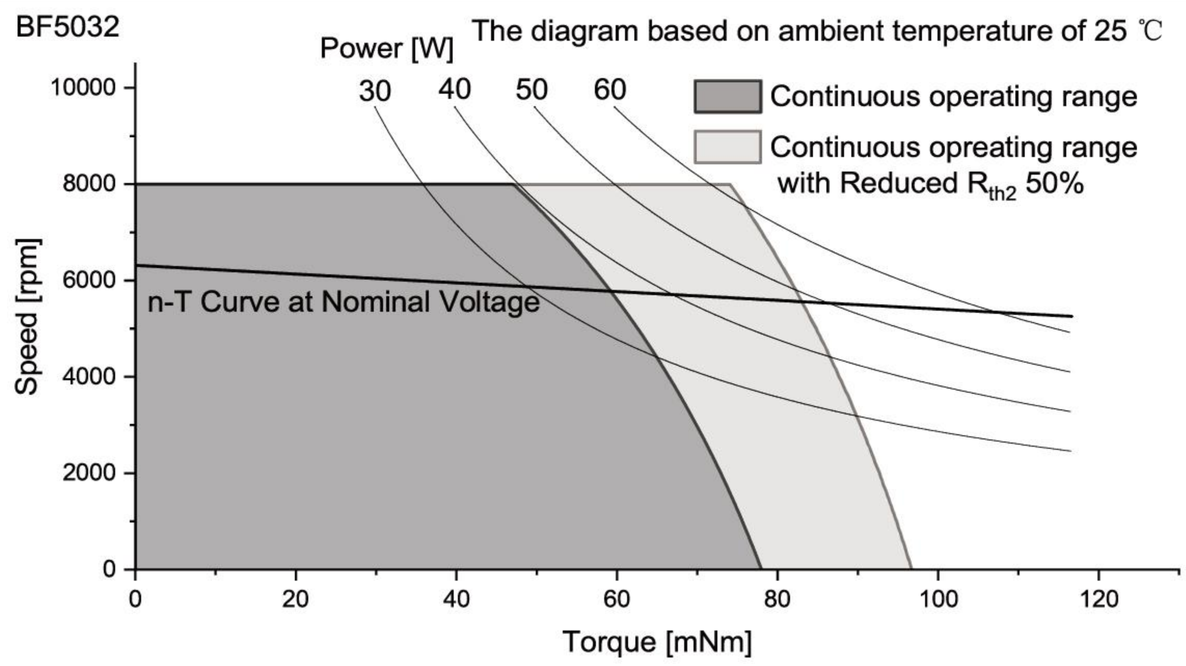

Controller features

Sensor, Open loop, Imax < 4A
Overload protection, Stall protection
Max. temperature of electronics +105℃

Connection

Conection		PVC	
Pin 1	+VCC	AWG24	red
Pin 2	GND	AWG24	black
Pin 1	SP	AWG24	blue
Pin 2	FG	AWG24	yellow

Caution:
Incorrect lead connection will damage the controller!

Configuration

Function: On&Off/Direction/Speed control/Brake
Speed closed&open-loop Control/Speed feedback
Performance: Customized in the continuous operating range
Ball bearing: Preload
Flange: Standard frange front&back/customize the frange
Shaft: Length/Diameter/Cut face
Leadwire: PVC/Silicon/Teflon/UL No/Dimension/length
Connector: JST/MOLEX/TE

More:
Please contact our sales engineers

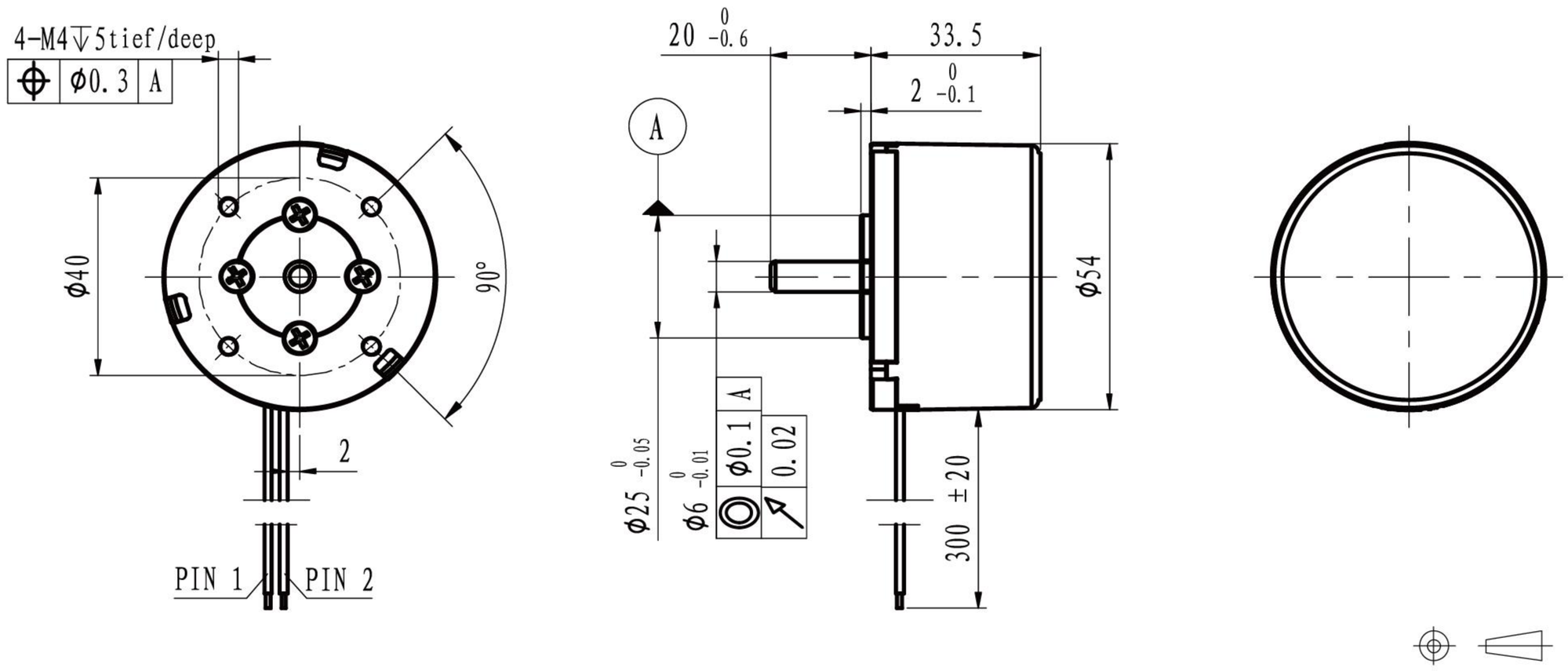

	With hall sensor	BF5434S-…	1204	2404						
Motor data										
Values at nominal voltage										
1	Nominal voltage	V	12	24						
2	No load speed	rpm	4015	4042						
3	No load current	mA	230	150						
4	Nominal speed	rpm	3716	3774						
5	Nominal torque	mNm	90	90						
6	Nominal current	A	3.40	1.75						
7	Stall torque	mNm	1210.09	1357.60						
8	Stall current	A	42.86	24.24						
9	Max. efficiency	%	85.9	84.9						
10	Supply voltage +Vcc	V	10..28	10..28						
11	Direction of ratation		CW	CW						
12	Torque constant	mNm/A	28.39	56.35						
13	Speed constant	rpm/V	336	169						
14	Speed/torque gradient	rpm/mNm	3	3						
15	Mechanical time constant	ms	7.2	6.5						
16	Rotor inertia	gcm^2	208	208						

17	Thermal resistance housing-ambient	6.1 K/W
18	Thermal resistance winding-housing	3.3 K/W
19	Thermal time constant winding	24 s
20	Thermal time constant motor	565 s
21	Ambient temprature	-30…+100℃
22	Max. permissible winding temperature	+150℃
23	Max. permissible speed	8000 rpm
24	Axial play at axial load <8 N	0 mm
	>8 N	max. 0.3 mm
25	Radial play	preloaded
26	Max. axial load (dynamic)	7.5 N
27	Max.force for press fits (static)	100 N
	(static, shaft supported)	2700 N
28	Max. radial loading, 5mm from flange	25 N
29	Number of pole pairs	5
30	Number of phases	3
31	Weight of motor	220 g

Operating Range

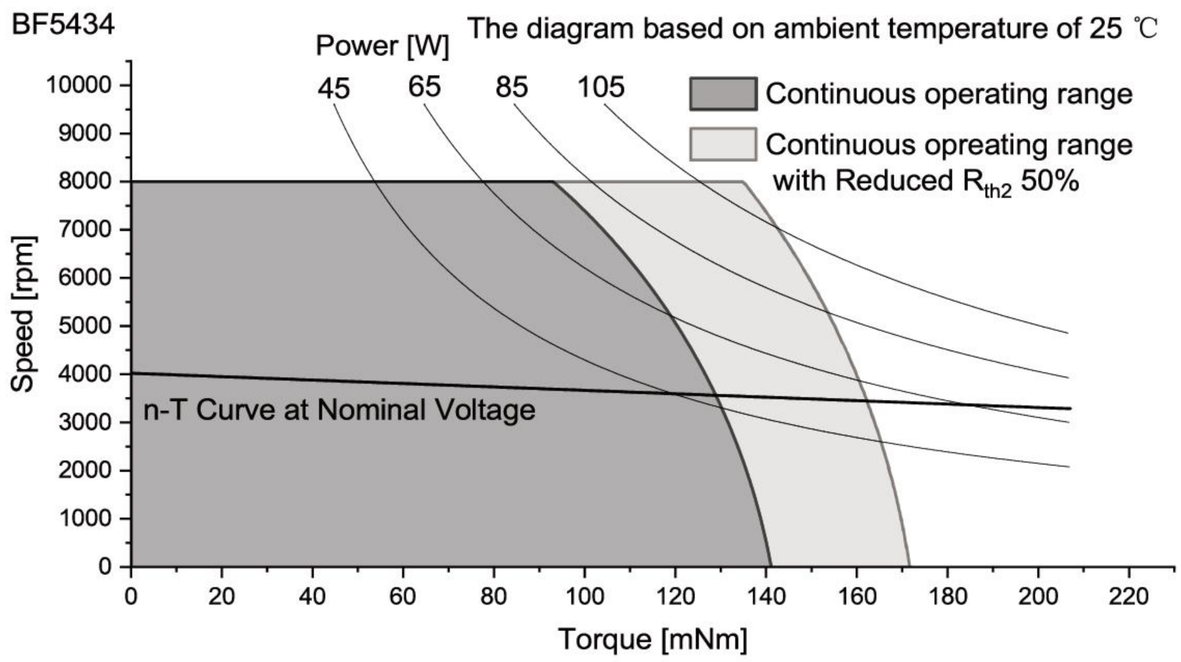

Controller features

Sensor, Open loop, Imax < 5A
Overload protection, Stall protection
Max. temperature of electronics +105℃

Connection

Conection

		PVC	
Pin 1	+VCC	AWG20	red
Pin 2	GND	AWG20	black

Caution:
Incorrect lead connection will damage the controller!

Configuration

Function: On&Off/Direction/Speed control/Brake
Speed closed&open-loop Control/Speed feedback
Performance: Customized in the continuous operating range
Ball bearing: Preload
Flange: Standard frange front&back/customize the frange
Shaft: Length/Diameter/Cut face
Leadwire: PVC/Silicon/Teflon/UL No/Dimension/length
Connector: JST/MOLEX/TE

More:
Please contact our sales engineers

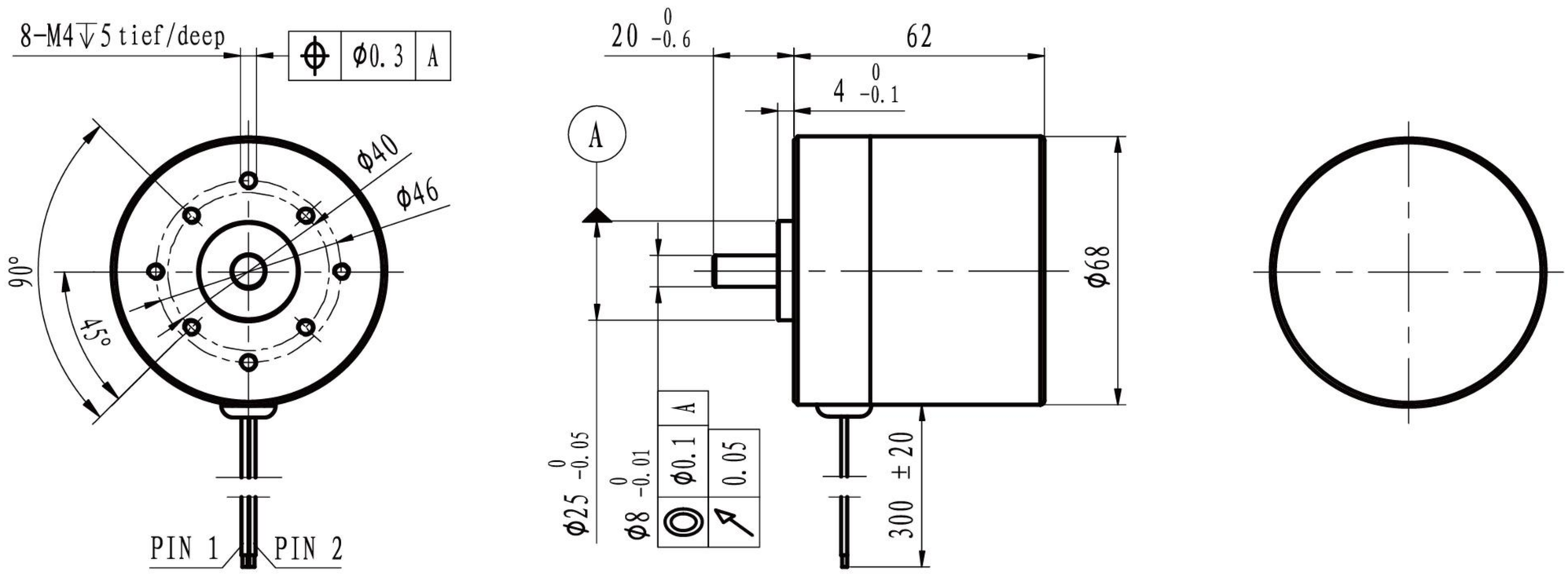

M 1:2.5

	With hall sensor	BF6862S-…	2403							
Motor data										
Values at nominal voltage										
1	Nominal voltage	V	24							
2	No load speed	rpm	3107							
3	No load current	mA	190							
4	Nominal speed	rpm	2873							
5	Nominal torque	mNm	200							
6	Nominal current	A	2.92							
7	Stall torque	mNm	2654							
8	Stall current	A	36.36							
9	Max. efficiency	%	86.1							
10	Supply voltage +Vcc	V	10..28							
11	Direction of ratation		CW							
12	Torque constant	mNm/A	73.38							
13	Speed constant	rpm/V	130							
14	Speed/torque gradient	rpm/mNm	1.2							
15	Mechanical time constant	ms	22.8							
16	Rotor inertia	gcm^2	1861							

17	Thermal resistance housing-ambient		2.7 K/W
18	Thermal resistance winding-housing		1.4 K/W
19	Thermal time constant winding		19 s
20	Thermal time constant motor		650 s
21	Ambient temprature		-30…+100℃
22	Max. permissible winding temperature		+150℃
23	Max. permissible speed		8000 rpm
24	Axial play at axial load	<8 N	0 mm
		>8 N	max. 0.3 mm
25	Radial play		preloaded
26	Max. axial load (dynamic)		7.5 N
27	Max.force for press fits (static)		100 N
	(static, shaft supported)		2700 N
28	Max. radial loading, 5mm from flange		25 N
29	Number of pole pairs		5
30	Number of phases		3
31	Weight of motor		606 g

Operating Range

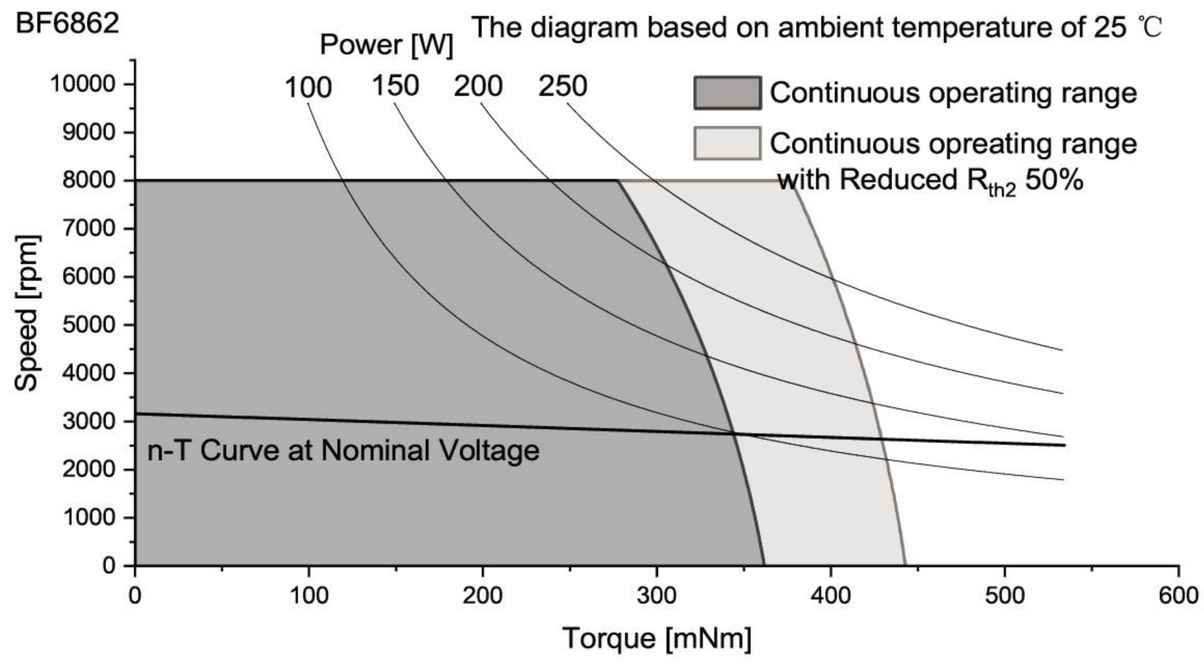

Controller features	
Sensor, Open loop, Imax < 8A	
Overload protection, Stall protection	
Max. temperature of electronics	+105℃

Connection

Conection		PVC	
Pin 1	+VCC	AWG20	red
Pin 2	GND	AWG20	black

Caution:
Incorrect lead connection will damage the controller!

Configuration

Function: On&Off/Direction/Speed control/Brake
Speed closed&open-loop Control/Speed feedback
Performance: Customized in the continuous operating range
Ball bearing: Preload
Flange: Standard frange front&back/customize the frange
Shaft: Length/Diameter/Cut face
Leadwire: PVC/Silicon/Teflon/UL No/Dimension/length
Connector: JST/MOLEX/TE

More:
Please contact our sales engineers

Subject: _____

Date: _____

SLOTTED BLDC MOTOR

ECI Series

Multipole internal rotor design

Model	Dimension (mm)	Nominal Troque (mNm)	Nominal Speed (rpm)	Page
ECi4036	Φ40x36	55	9000	113
ECi4056	Φ40x56	175	3500	114
ECi5640	Φ56x40	210	3500	115

SLOTTED BLDC MOTOR

ECI Series

Multipole internal rotor design

By increasing the number of poles, this series can have the characteristics of high torque output, low speed and high efficiency without increasing the size of the motor, and because the electromagnetic force distribution of the motor is more uniform, the torque ripple and vibration are reduced,and the motor can provide higher torque and eficiency at lower speeds, while reducing torque ripple, so that the motor runs more smoothly

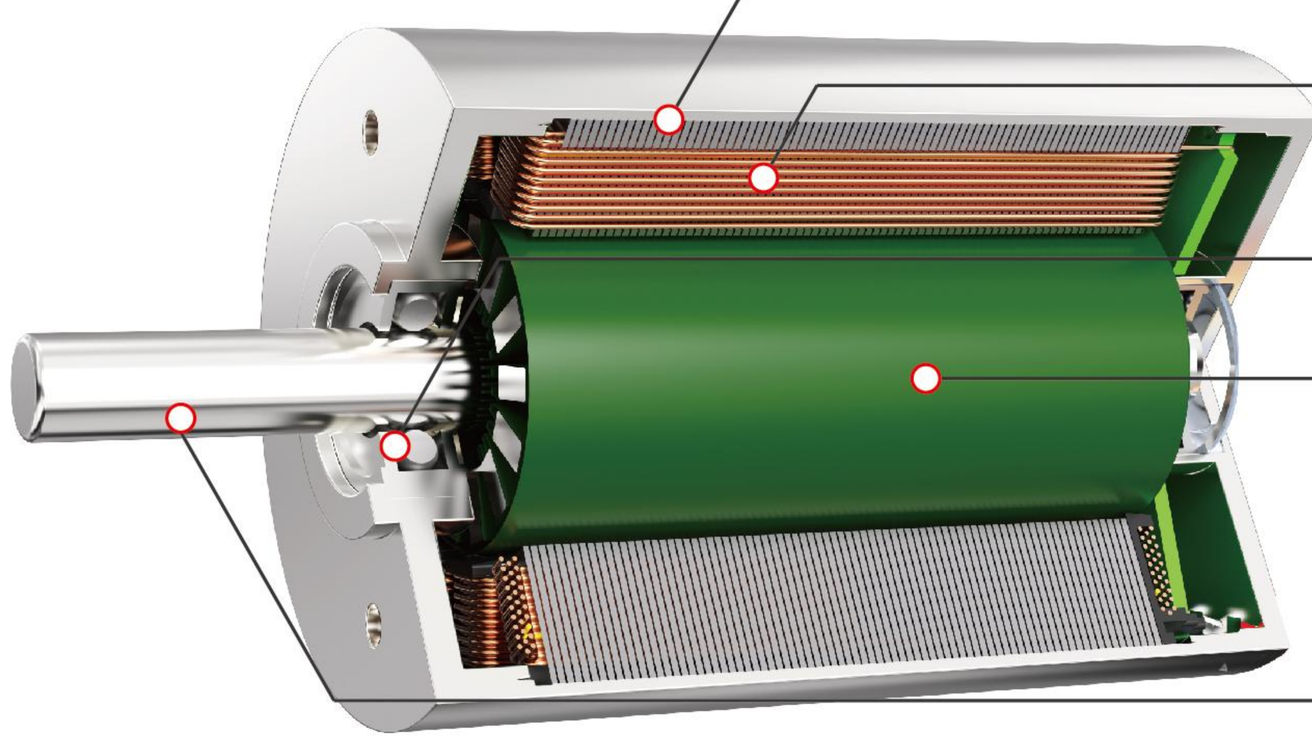

Basic Data:
Diameter: φ40mm-58mmm
Maximum Length: 56mm
Operate Voltage: 12V-48VDC
Maximum Permissiblespeed: 10,000rpm
Operate temperature: -30°C-+80°CC

Typical features:
High torque density
Large starting torque
Low noise
Good heat dissipation
Long operational lifetime
Customizable

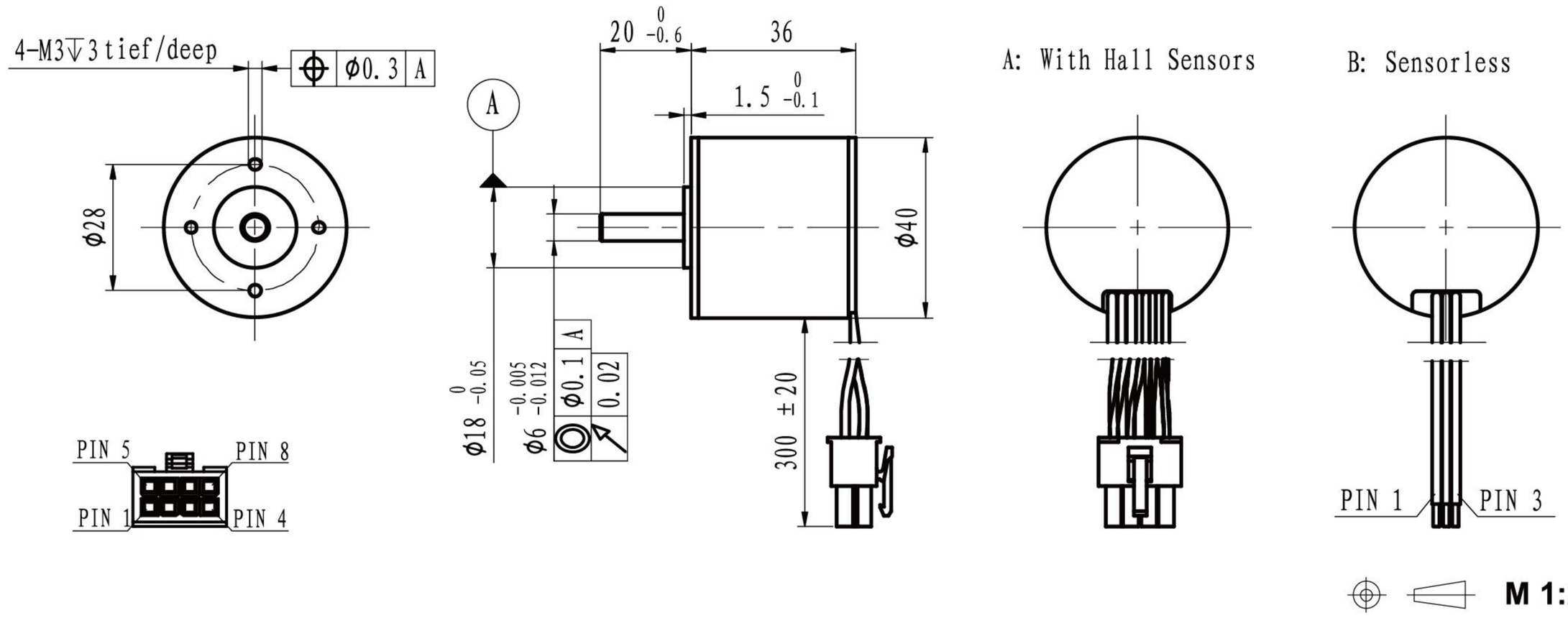

		Sensorless / With hall sensor	ECi4036L-… / ECi4036S-…	1210	2410
Motor data					
Values at nominal voltage					
1	Nominal voltage		V	12	24
2	No load speed		rpm	10083	10022
3	No load current		mA	550	280
4	Nominal speed		rpm	9465	9483
5	Nominal torque		mNm	55	55
6	Nominal current		A	5.42	2.70
7	Stall torque		mNm	896.73	1022.77
8	Stall current		A	80.00	45.28
9	Max. efficiency		%	84.1	84.9
10	Terminal resistance		Ω	0.15	0.53
11	Terminal inductance		mH	0.08	0.28
12	Torque constant		mNm/A	11.29	22.73
13	Speed constant		rpm/V	846	420
14	Speed/torque gradient		rpm/mNm	11	10
15	Mechanical time constant		ms	2.6	2.3
16	Rotor inertia		gcm^2	22.2	22.2
17	Thermal resistance housing-ambient		7.3 K/W		
18	Thermal resistance winding-housing		4.6 K/W		
19	Thermal time constant winding		32 s		
20	Thermal time constant motor		796 s		
21	Ambient temprature		-30…+100℃		
22	Max. permissible winding temperature		+150℃		
23	Max. permissible speed		15000 rpm		
24	Axial play at axial load	<10N	0 mm		
		>10N	max. 0.3 mm		
25	Radial play		preloaded		
26	Max. axial load (dynamic)		9 N		
27	Max.force for press fits (static)		170 N		
	(static, shaft supported)		4500 N		
28	Max. radial loading, 5mm from flange		80 N		
29	Number of pole pairs		7		
30	Number of phases		3		
31	Weight of motor		222 g		

Operating Range

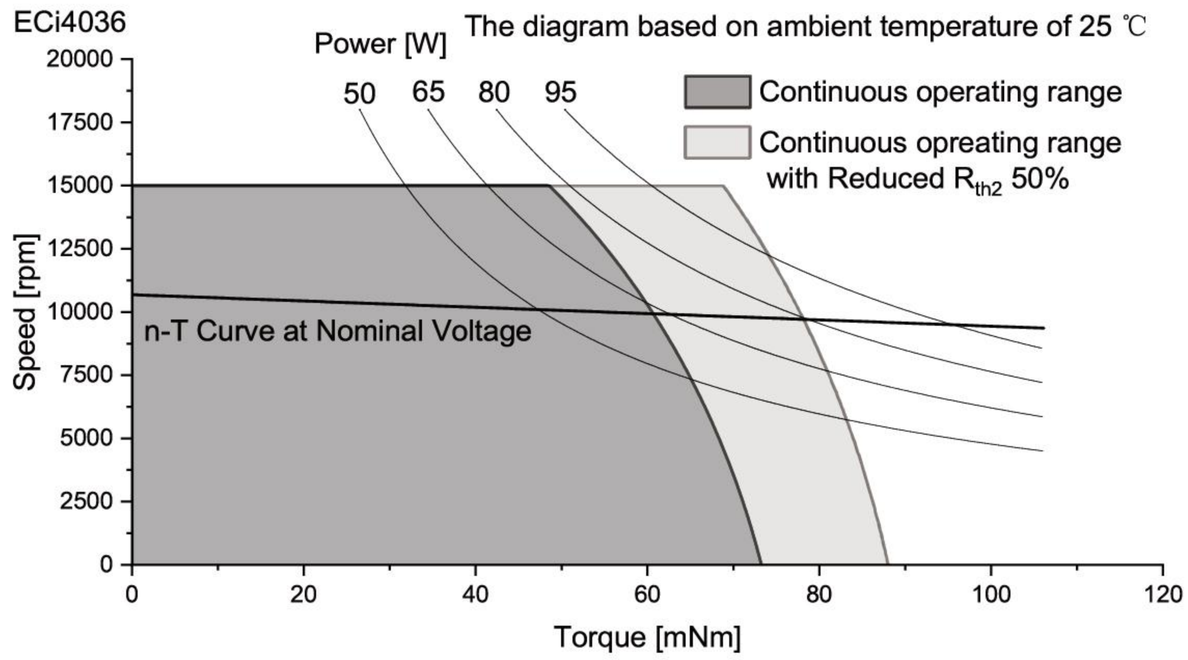

Connection

Conection A (Sensor)		PTFE	
Pin 1	Motor winding MB	AWG20	Green
Pin 2	Vhall 3-18 VDC	AWG26	Red
Pin 3	Hall sensor HA	AWG26	Yellow
Pin 4	Hall sensor HC	AWG26	Blue
Pin 5	Motor winding MA	AWG20	Yellow
Pin 6	Motor winding MC	AWG20	Blue
Pin 7	GND	AWG26	Black
Pin 8	Hall sensor HB	AWG26	Green
Conector			
Molex5557-8P			
Conection B (Sensorless)		PTFE	
Pin 1	Motor winding MA	AWG20	Yellow
Pin 2	Motor winding MB	AWG20	Green
Pin 3	Motor winding MC	AWG20	Blue

Configuration

Performance: Customized in the continuous operating range
Ball bearing: Preload
Flange: Standard frange front&back/customize the frange
Shaft: Length/Diameter/Cut face/double shaft/hollow shaft
Leadwire: PVC/Silicon/Teflon/UL No/Dimension/length
Connector: JST/MOLEX/TE

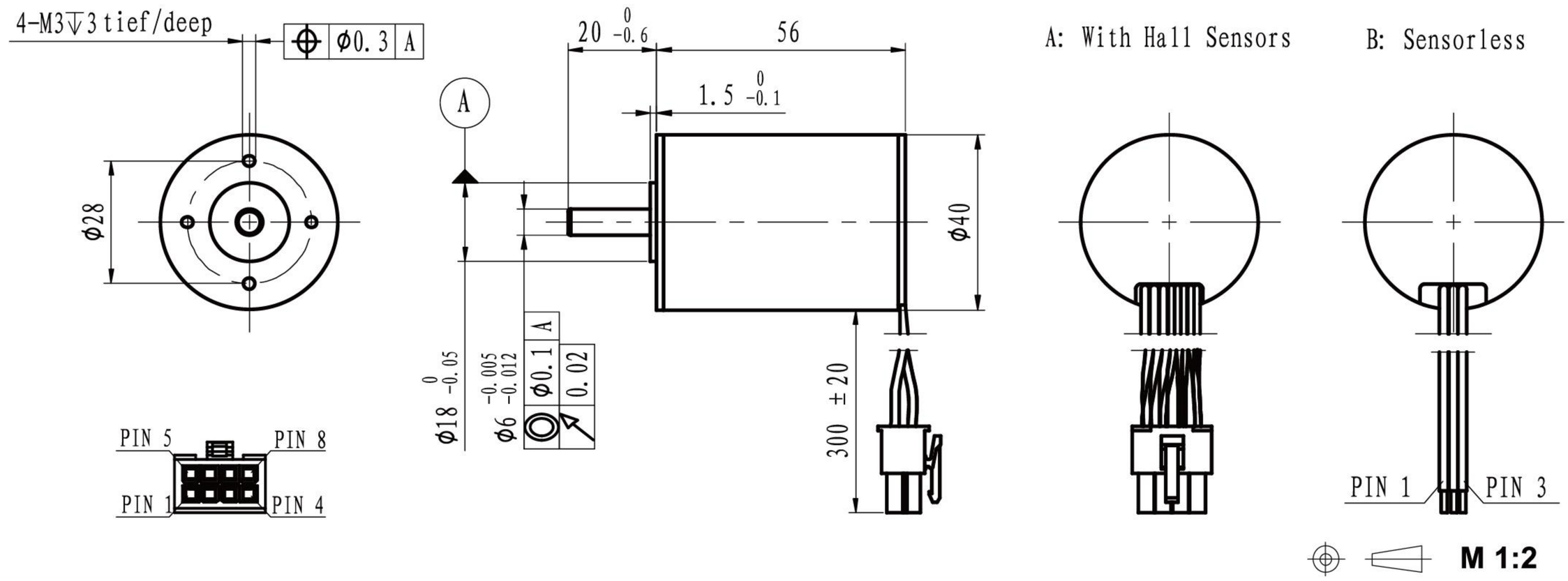

	Sensorless With hall sensor	ECi4056L-… ECi4056S-…	3604	4804
Motor data				
Values at nominal voltage				
1	Nominal voltage	V	36	48
2	No load speed	rpm	4082	4033
3	No load current	mA	180	140
4	Nominal speed	rpm	3820	3758
5	Nominal torque	mNm	175	175
6	Nominal current	A	2.27	1.69
7	Stall torque	mNm	2725.96	2566.08
8	Stall current	A	32.73	22.86
9	Max. efficiency	%	85.7	85.0
10	Terminal resistance	Ω	1.1	2.1
11	Terminal inductance	mH	0.64	1.16
12	Torque constant	mNm/A	83.75	112.96
13	Speed constant	rpm/V	114	85
14	Speed/torque gradient	rpm/mNm	1	2
15	Mechanical time constant	ms	0.6	0.6
16	Rotor inertia	gcm^2	36.7	36.7

17	Thermal resistance housing-ambient	7.9 K/W
18	Thermal resistance winding-housing	1.5 K/W
19	Thermal time constant winding	23 s
20	Thermal time constant motor	1438 s
21	Ambient temprature	-30…+100℃
22	Max. permissible winding temperature	+150℃
23	Max. permissible speed	8000 rpm
24	Axial play at axial load <10N	0 mm
	>10N	max. 0.3 mm
25	Radial play	preloaded
26	Max. axial load (dynamic)	9 N
27	Max.force for press fits (static)	170 N
	(static, shaft supported)	4500 N
28	Max. radial loading, 5mm from flange	80 N
29	Number of pole pairs	7
30	Number of phases	3
31	Weight of motor	358 g

Operating Range

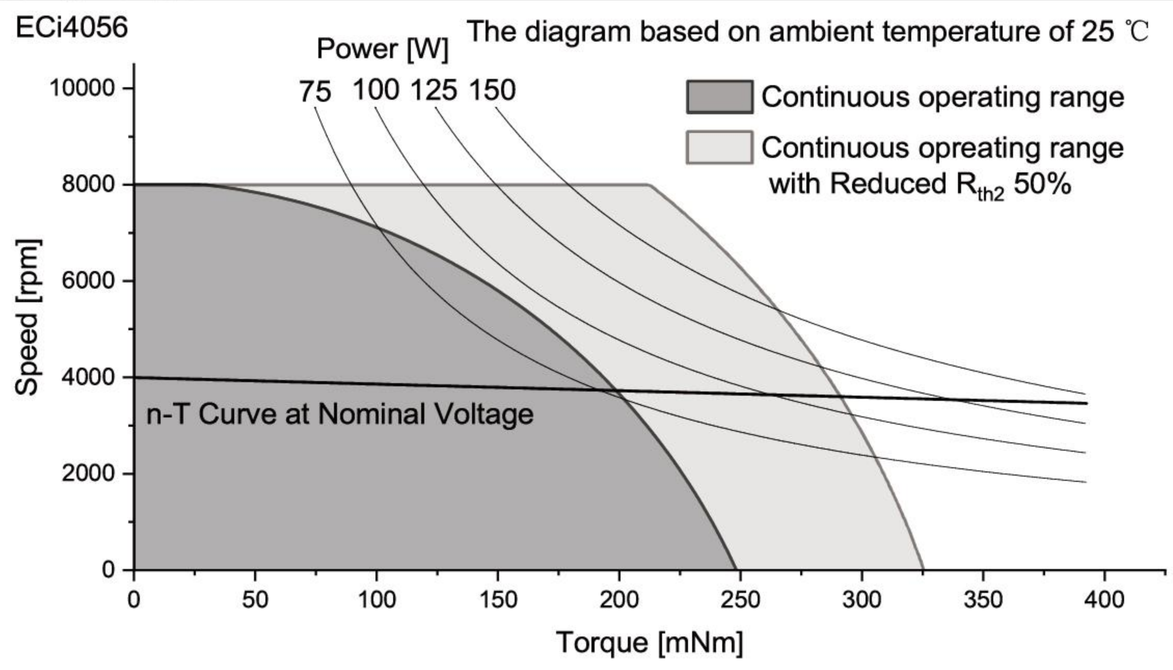

Connection

Conection A (Sensor) PTFE

Pin 1	Motor winding MB	AWG20	Green
Pin 2	Vhall 3-18 VDC	AWG26	Red
Pin 3	Hall sensor HA	AWG26	Yellow
Pin 4	Hall sensor HC	AWG26	Blue
Pin 5	Motor winding MA	AWG20	Yellow
Pin 6	Motor winding MC	AWG20	Blue
Pin 7	GND	AWG26	Black
Pin 8	Hall sensor HB	AWG26	Green

Conector
Molex5557-8P

Conection B (Sensorless) PTFE

Pin 1	Motor winding MA	AWG20	Yellow
Pin 2	Motor winding MB	AWG20	Green
Pin 3	Motor winding MC	AWG20	Blue

Configuration

Performance: Customized in the continuous operating range
Ball bearing: Preload
Flange: Standard frange front&back/customize the frange
Shaft: Length/Diameter/Cut face/double shaft/hollow shaft
Leadwire: PVC/Silicon/Teflon/UL No/Dimension/length
Connector: JST/MOLEX/TE

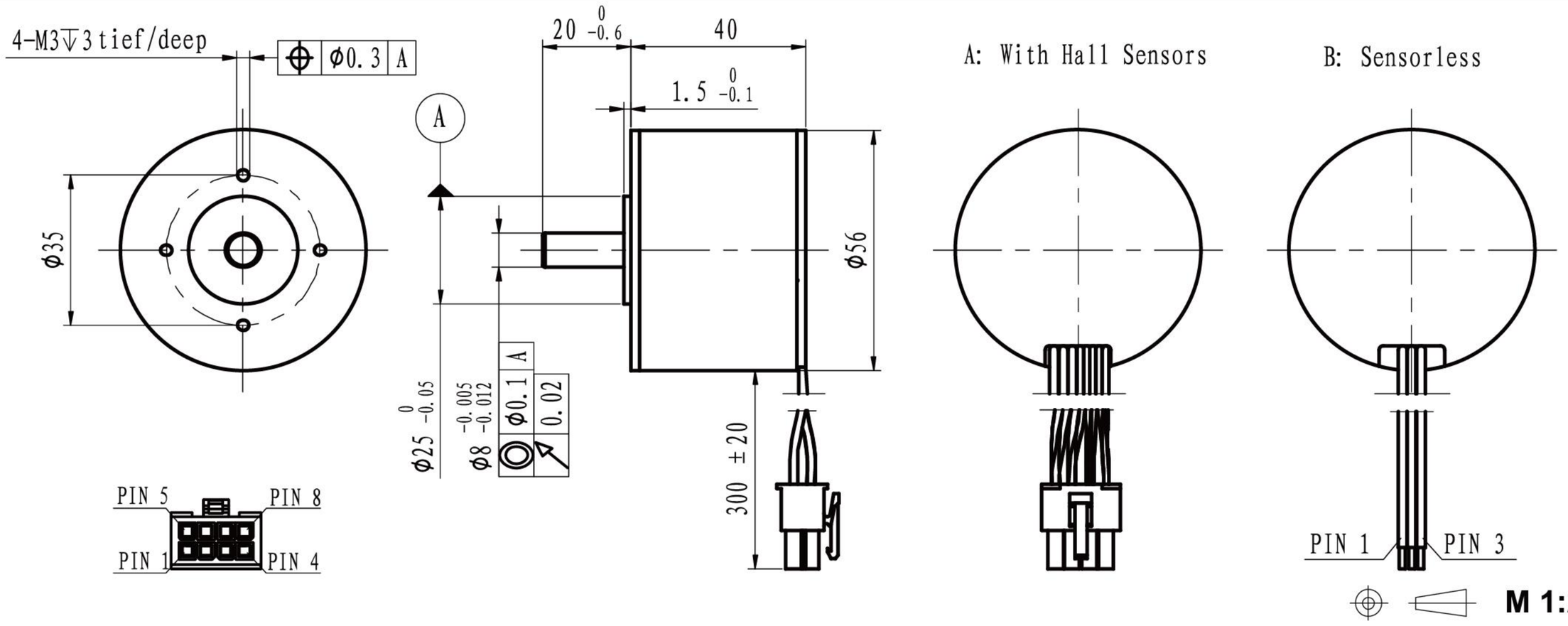

		Sensorless With hall sensor	ECi5640L-… ECi5640S-…	2404	4804						
Motor data											
Values at nominal voltage											
1	Nominal voltage		V	24	48						
2	No load speed		rpm	4065	4012						
3	No load current		mA	310	150						
4	Nominal speed		rpm	3694	3582						
5	Nominal torque		mNm	210	210						
6	Nominal current		A	4.06	2.00						
7	Stall torque		mNm	2298.12	1960.03						
8	Stall current		A	41.38	17.45						
9	Max. efficiency		%	83.4	82.3						
10	Terminal resistance		Ω	0.58	2.75						
11	Terminal inductance		mH	0.29	1.3						
12	Torque constant		mNm/A	55.96	113.27						
13	Speed constant		rpm/V	171	84						
14	Speed/torque gradient		rpm/mNm	2	2						
15	Mechanical time constant		ms	3.2	3.7						
16	Rotor inertia		gcm^2	173.2	173.2						

17	Thermal resistance housing-ambient		15.2 K/W
18	Thermal resistance winding-housing		6.0 K/W
19	Thermal time constant winding		11 s
20	Thermal time constant motor		383 s
21	Ambient temprature		-30…+100℃
22	Max. permissible winding temperature		+150℃
23	Max. permissible speed		8000 rpm
24	Axial play at axial load	<10N	0 mm
		>10N	max. 0.3 mm
25	Radial play		preloaded
26	Max. axial load (dynamic)		9 N
27	Max.force for press fits (static)		170 N
	(static, shaft supported)		4500 N
28	Max. radial loading, 5mm from flange		80 N
29	Number of pole pairs		7
30	Number of phases		3
31	Weight of motor		320 g

Operating Range

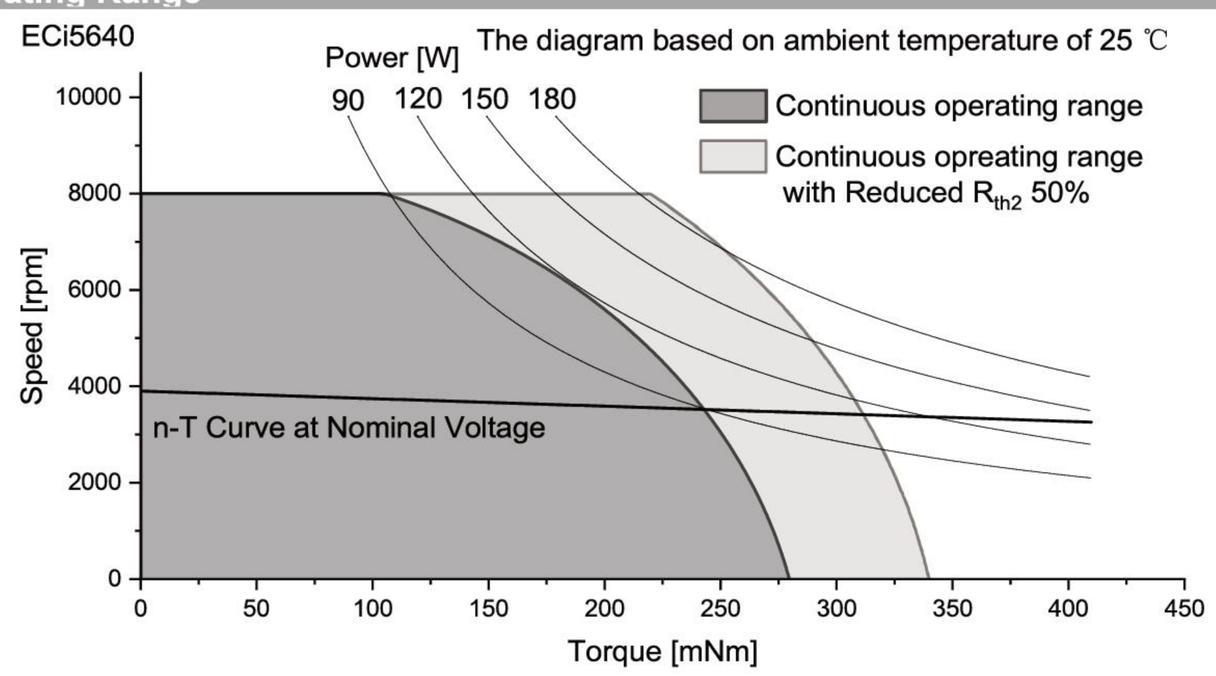

Connection

Conection A (Sensor) PTFE

Pin 1	Motor winding MB	AWG20	Green
Pin 2	Vhall 3-18 VDC	AWG26	Red
Pin 3	Hall sensor HA	AWG26	Yellow
Pin 4	Hall sensor HC	AWG26	Blue
Pin 5	Motor winding MA	AWG20	Yellow
Pin 6	Motor winding MC	AWG20	Blue
Pin 7	GND	AWG26	Black
Pin 8	Hall sensor HB	AWG26	Green

Conector
Molex5557-8P

Conection B (Sensorless) PTFE

Pin 1	Motor winding MA	AWG20	Yellow
Pin 2	Motor winding MB	AWG20	Green
Pin 3	Motor winding MC	AWG20	Blue

Configuration

Performance: Customized in the continuous operating range
Ball bearing: Preload
Flange: Standard frange front&back/customize the frange
Shaft: Length/Diameter/Cut face/double shaft/hollow shaft
Leadwire: PVC/Silicon/Teflon/UL No/Dimension/length
Connector: JST/MOLEX/TE

Subject: _____

Date: _____

Planetary gearhead

Screw gearhead

Model	Dimension (mm)	Nominal Troque (mNm)	Page
PG08	Φ8	0.01-0.1	118
PG10	Φ10	0.03-0.3	119
PG12	Φ12	0.1-0.2	120
PG13	Φ13	0.18-0.36	121
PG16	Φ16	0.42-0.9	122
PG22	Φ22	0.72-1.45	123
PG28	Φ28	1.55-3.1	124
PG32	Φ32	2.34-4.65	125
PG36	Φ36	3.24-6.48	126
PG42	Φ42	6.5-13	127

Model	Dimension (mm)	Type	Page
GS16	Φ16	ball screw	128
GS22	Φ22	ball screw	129
GS30	Φ30	ball screw	130

Our high-precision planetary reduction gearbox can provide comprehensive customization of external dimensions,internal grease and gear materials, and achieve the best overall performance by adjusting the motor input speed

Basic Data:
Diameter: φ8mm-42mmm
Maximum Continuous torque: 25Nm
MaximumPermissiblespeed: 50,000rpm
Operate temperature: -30°C-+80°C

Modular platform:

EC Series	BL Series
EC- 4Pole series	BD Series
ECD Series	BF Series
ECH Series	ECI Series

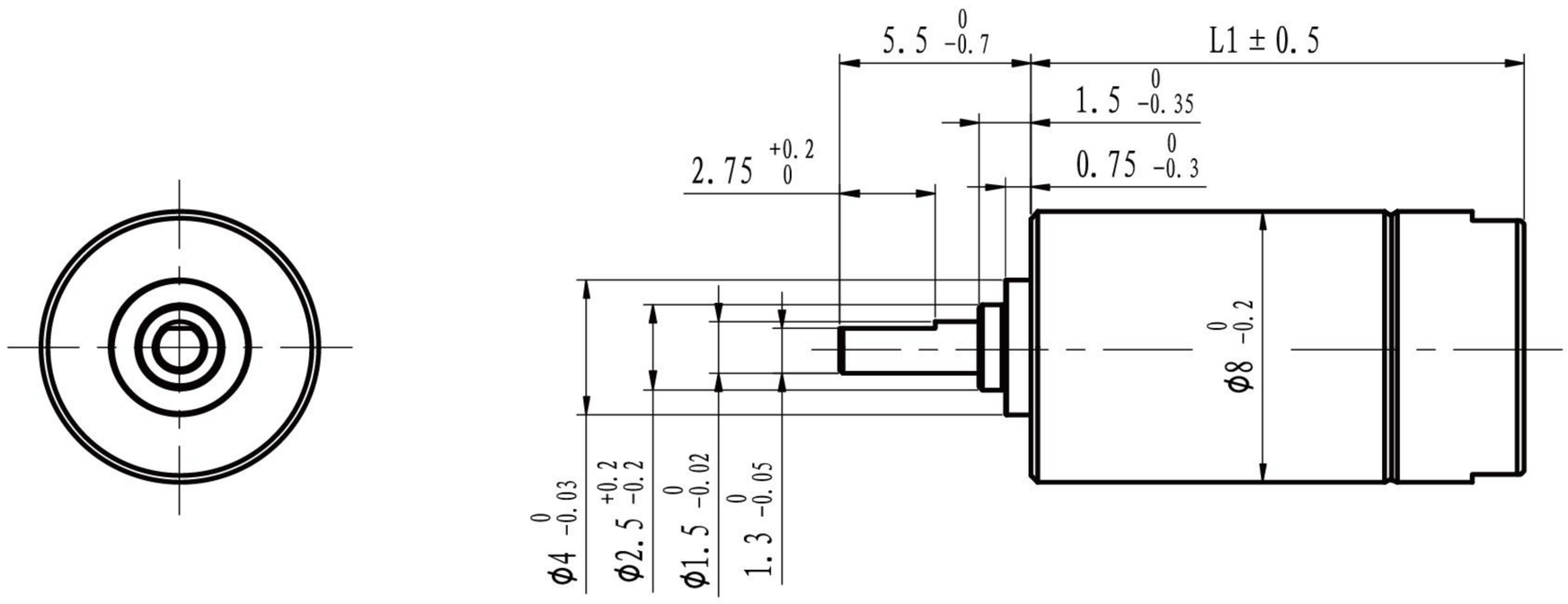

M 3:1

			PG08				
Gearhead Data							
1	Housing material				Steel		
2	Geartrain material				Steel		
3	Bearing type on output shaft				Ball bearing		
4	Max. radial load (4.5mm from flange)	N			8		
5	Max. axial load	N			5		
6	Radial play of shaft	mm			0.08		
7	Thrust play of shaft	mm			0.1		
8	Bcaklash at no load	°			3		
9	Max. continuous speed	rpm			22000		
10	Operating temperatue range	℃			-30..+100		
11	Number of stages		1	2	3	4	5
12	Max continuous torque	Nm	0.01	0.02	0.06	0.08	0.1
13	Max. intermittent torque	Nm	0.015	0.03	0.09	0.12	0.15
14	Max. efficiency	%	80	64	51	41	33
15	Gearhead length L1	mm	9.2	11.7	14.2	16.7	19.2
16	Ratio	X:1	4.64	21.5	99.6	462	2141

Configuration

Pinion: Metal/Plastic
Ball bearing: Preload
Flange: Standard frange front&back/customize the frange
Shaft: Length/Diameter/Cut face/double shaft/hollow shaft

More:
Special design for high speed/high torque
Details please contact our sales engineer

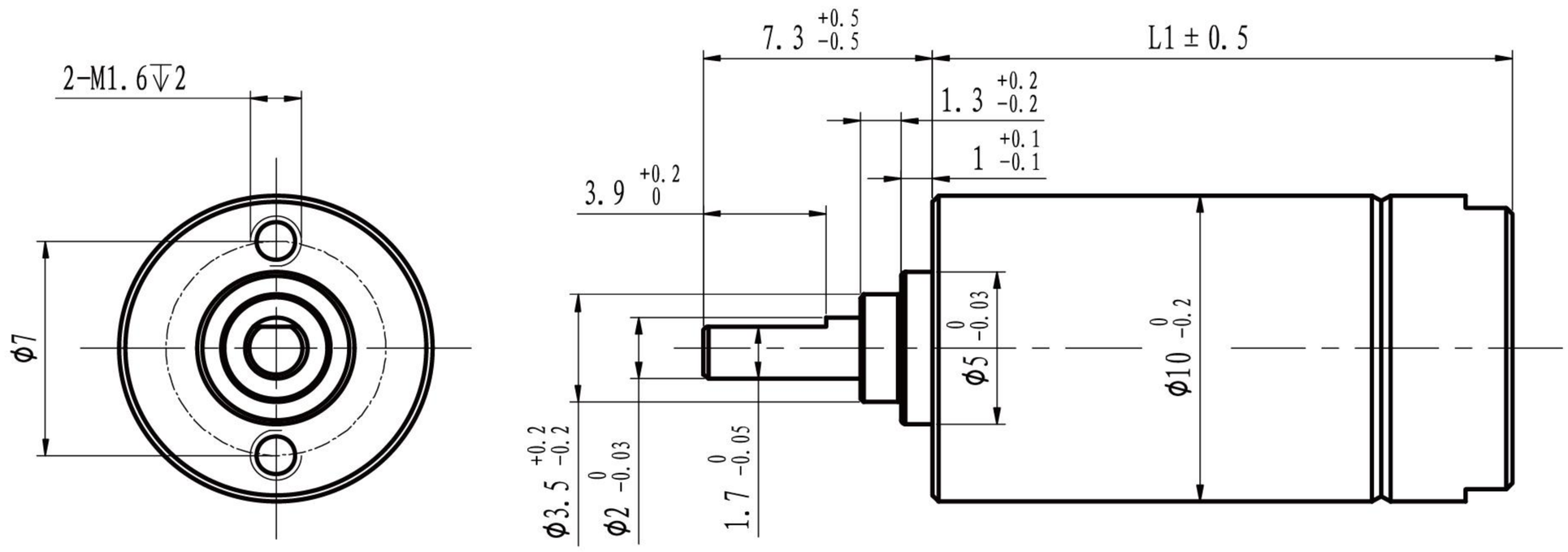

M 3:1

			PG08				
Gearhead Data							
1	Housing material				Steel		
2	Geartrain material				Steel		
3	Bearing type on output shaft				Ball bearing		
4	Max. radial load (5mm from flange)	N			10		
5	Max. axial load	N			5		
6	Radial play of shaft	mm			0.08		
7	Thrust play of shaft	mm			0.1		
8	Bcaklash at no load	°			3		
9	Max. continuous speed	rpm			30000		
10	Operating temperatue range	℃			-30..+100		
11	Number of stages		1	2	3	4	5
12	Max continuous torque	Nm	0.03	0.05	0.1	0.2	0.3
13	Max. intermittent torque	Nm	0.045	0.08	0.15	0.3	0.45
14	Max. efficiency	%	85	72	61	52	44
15	Gearhead length L1	mm	11.5	15	18.5	22	25.5
16	Ratio	X:1	4	16	64	256	1024

Configuration

Pinion: Metal/Plastic
Ball bearing: Preload
Flange: Standard frange front&back/customize the frange
Shaft: Length/Diameter/Cut face/double shaft/hollow shaft

More:
Special design for high speed/high torque
Details please contact our sales engineer

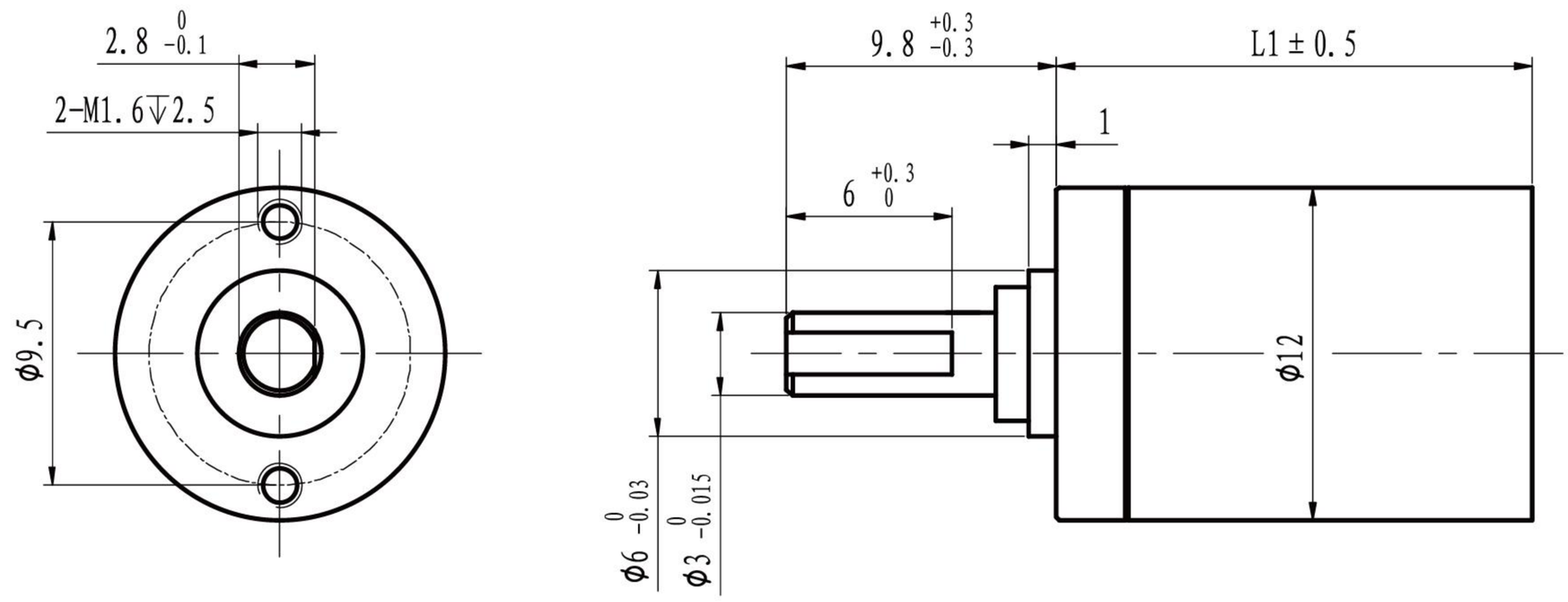

M 2.5:1

			PG12				
Gearhead Data							
1	Housing material		Steel				
2	Geartrain material		Steel				
3	Bearing type on output shaft		Ball bearing				
4	Max. radial load (10mm from flange)	N	5				
5	Max. axial load	N	5				
6	Radial play of shaft	mm	0.1				
7	Thrust play of shaft	mm	0.2				
8	Bcaklash at no load	°	3				
9	Max. continuous speed	rpm	42000				
10	Operating temperatue range	℃	-30..+100				
11	Number of stages		1	2	3	4	5
12	Max continuous torque	Nm	0.1	0.2	0.2	0.2	0.2
13	Max. intermittent torque	Nm	0.15	0.25	0.25	0.25	0.25
14	Max. efficiency	%	90	81	73	65	59
15	Gearhead length L1	mm	15.1	17.9	20.7	23.5	26.3
16	Ratio	X:1	3.47, 3.94	12.07, 13.68 15.5, 18.17	41.92, 47.51 55.69, 53.86 63.13 61.05 71.56, 83.88	145.6, 165.04 187,08, 219.29 248.56, 281.75 291.36 330.26	505.8,

Configuration

Pinion: Metal/Plastic
Ball bearing: Preload
Flange: Standard frange front&back/customize the frange
Shaft: Length/Diameter/Cut face/double shaft/hollow shaft

More:
Special design for high speed/high torque
Details please contact our sales engineer

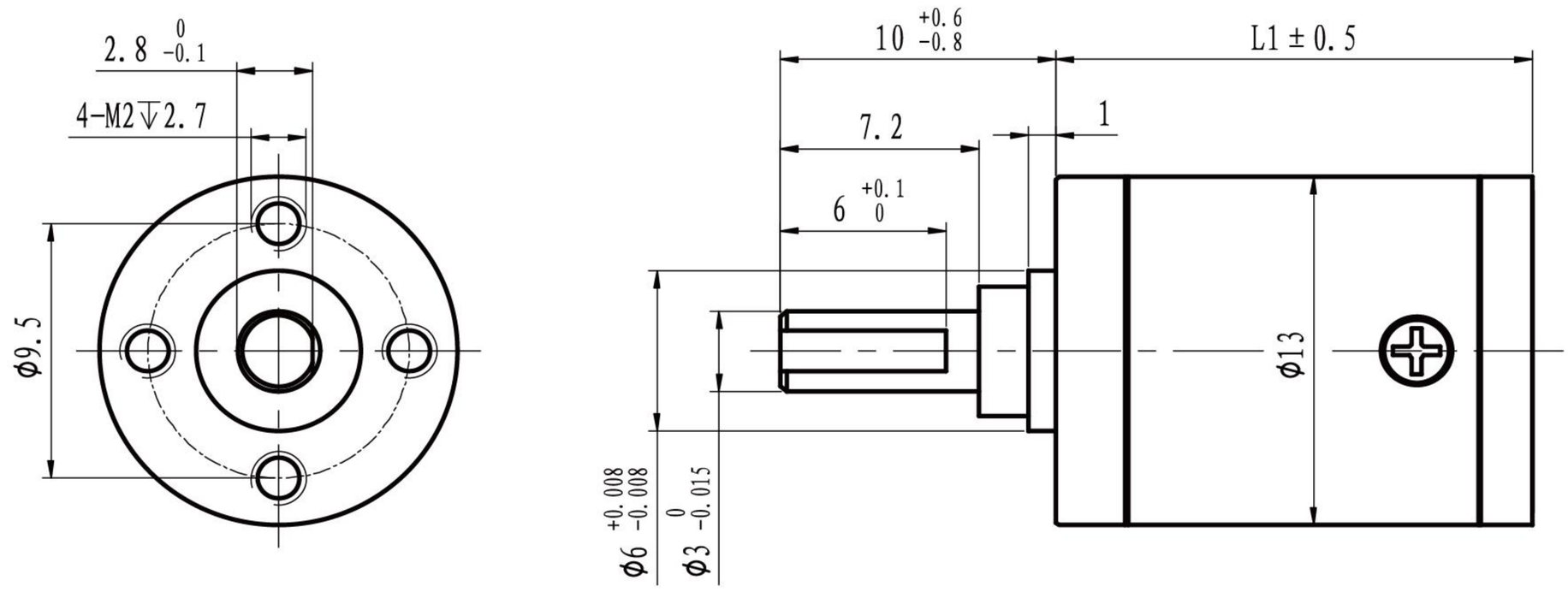

M 2.5:1

			PG12				
Gearhead Data							
1	Housing material		Steel				
2	Geartrain material		Steel				
3	Bearing type on output shaft		Ball bearing				
4	Max. radial load (10mm from flange)	N	5				
5	Max. axial load	N	5				
6	Radial play of shaft	mm	0.04				
7	Thrust play of shaft	mm	0.4				
8	Bcaklash at no load	°	2				
9	Max. continuous speed	rpm	42000				
10	Operating temperatue range	℃	-30..+100				
11	Number of stages		1	2	3	4	5
12	Max continuous torque	Nm	0.18	0.24	0.3	0.36	0.36
13	Max. intermittent torque	Nm	0.54	0.72	0.9	1.08	1.08
14	Max. efficiency	%	93	86	80	75	70
15	Gearhead length L1	mm	16.1	19.6	23.1	26.6	30.1
16	Ratio	X:1	3.6, 4.9	13, 17.6 24	46.7, 63.5 86.4, 117.6	168, 228.6 311.2, 423.5 576.5	604,7, 823, 1120.2, 1524.7, 2075.3,2824.8

Configuration

Pinion: Metal/Plastic
Ball bearing: Preload
Flange: Standard frange front&back/customize the frange
Shaft: Length/Diameter/Cut face/double shaft/hollow shaft

More:
Special design for high speed/high torque
Details please contact our sales engineer

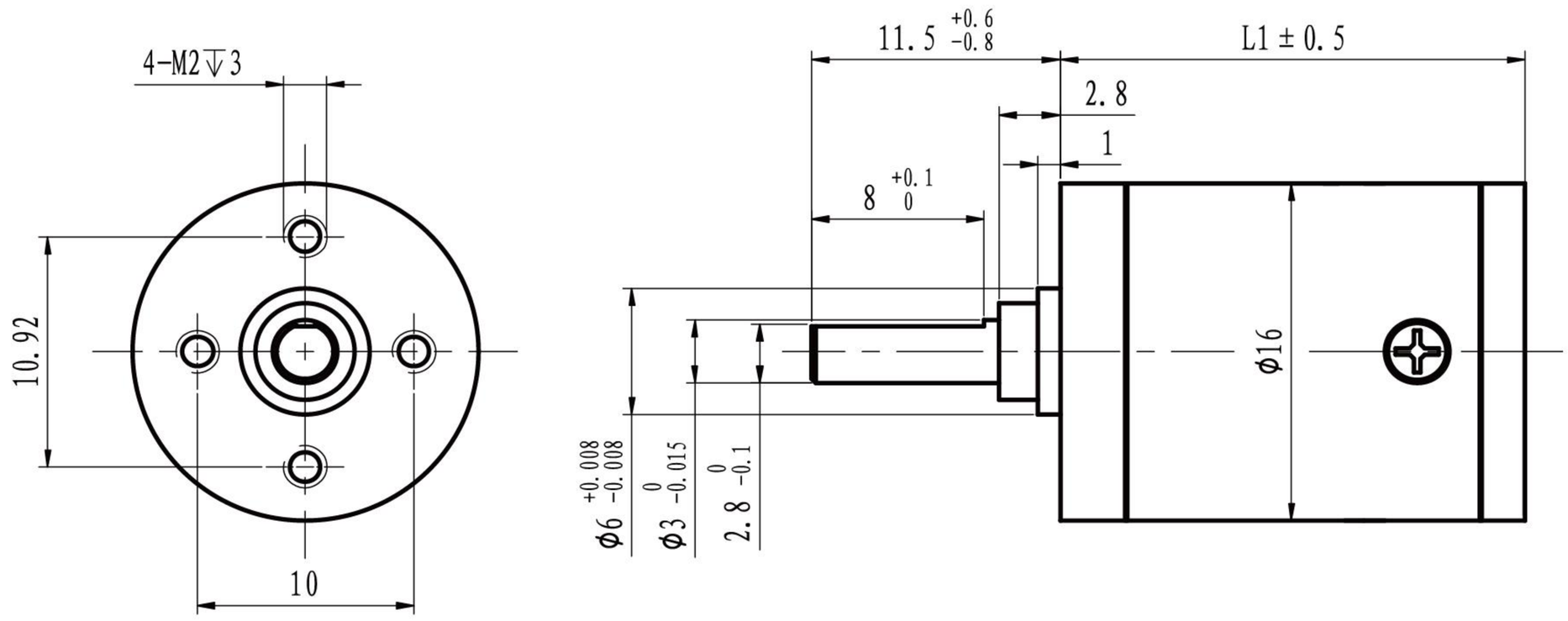

M 2:1

			PG16				
Gearhead Data							
1	Housing material		Steel				
2	Geartrain material		Steel				
3	Bearing type on output shaft		Ball bearing				
4	Max. radial load (10mm from flange)	N	15.6				
5	Max. axial load	N	4.9				
6	Radial play of shaft	mm	0.04				
7	Thrust play of shaft	mm	0.4				
8	Bcaklash at no load	°	2				
9	Max. continuous speed	rpm	42000				
10	Operating temperatue range	℃	-30..+100				
11	Number of stages		1	2	3	4	5
12	Max continuous torque	Nm	0.42	0.6	0.75	0.9	0.9
13	Max. intermittent torque	Nm	0.84	1.2	1.5	1.8	1.8
14	Max. efficiency	%	90	83	77	72	67
15	Gearhead length L1	mm	17.9	21.8	25.7	29.6	33.5
16	Ratio	X:1	3.7, 4.4, 5.4, 6.5	14.5, 16.4, 19.2, 23.7, 28.5, 35.1 42.3,	48.2, 54.5, 61.7, 67.1, 75.9, 80.8, 88.8, 94.5, 103.8, 109.3 125, 131 154, 185.3	204, 228, 251.8, 274.6, 294.4, 313.3 333, 354.4, 389.3, 400.8 455.2, 493.6, 547.9, 560.6 674.8, 690.4	738, 850.3, 944.2, 1023.5, 1136.6, 1232 1328.9, 1447.2, 1502.9, 1636.7, 1757, 1851 1996, 2164, 2402, 2530, 3027, 3644,

Configuration

Pinion: Metal/Plastic
Ball bearing: Preload
Flange: Standard frange front&back/customize the frange
Shaft: Length/Diameter/Cut face/double shaft/hollow shaft

More:
Special design for high speed/high torque
Details please contact our sales engineer

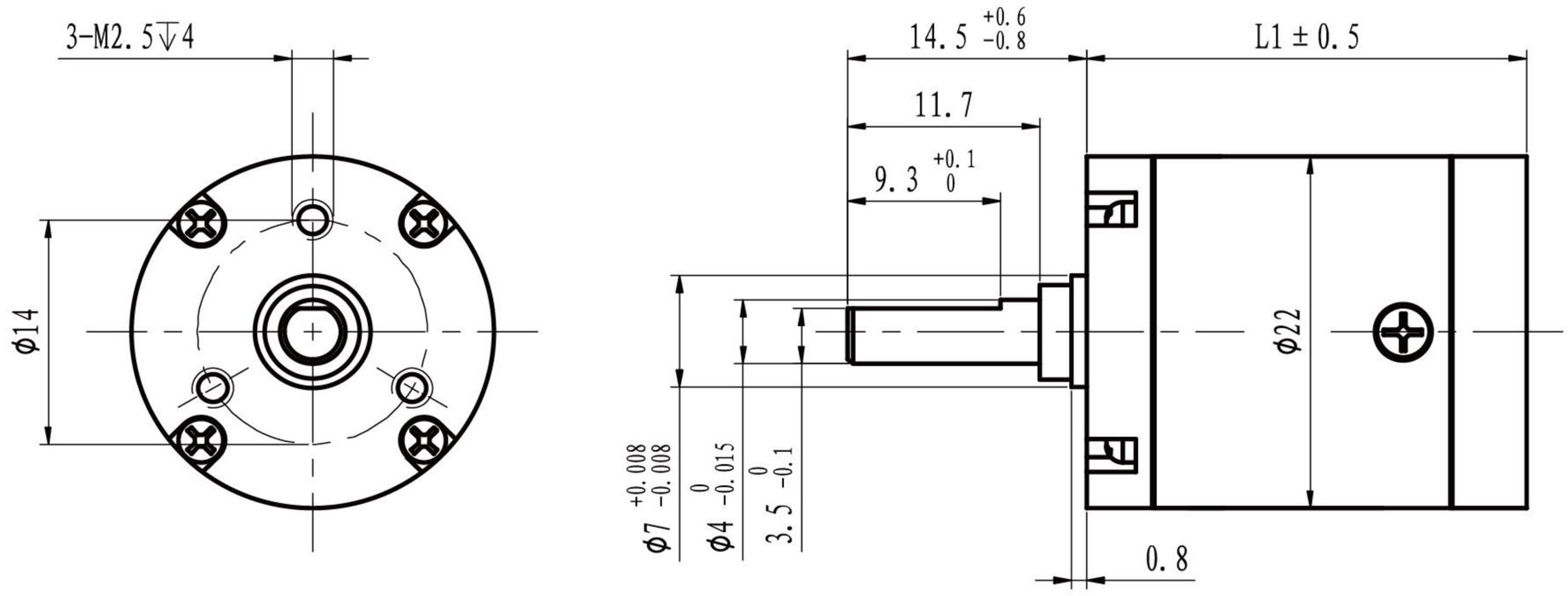

M 1.2:1

			PG22				
Gearhead Data							
1	Housing material		Steel				
2	Geartrain material		Steel				
3	Bearing type on output shaft		Ball bearing				
4	Max. radial load (10mm from flange)	N	15.6				
5	Max. axial load	N	4.9				
6	Radial play of shaft	mm	0.04				
7	Thrust play of shaft	mm	0.4				
8	Bcaklash at no load	°	2				
9	Max. continuous speed	rpm	42000				
10	Operating temperatue range	℃	-30..+100				
11	Number of stages		1	2	3	4	5
12	Max continuous torque	Nm	0.72	0.96	1.2	1.45	1.45
13	Max. intermittent torque	Nm	1.44	1.92	2.4	2.9	2.9
14	Max. efficiency	%	90	83	77	72	72
15	Gearhead length L1	mm	22.6	27.6	32.7	37.7	42.8
16	Ratio	X:1	3.7, 4.4, 5.4, 6.5 .	14.5, 16.4, 19.2, 23.7, 28.5, 35.1 42.3,	48.2, 54.5, 61.7, 67.1, 75.9, 80.8, 88.8, 94.5, 103.8, 109.3 125, 131 154, 185.3	204, 228, 251.8, 274.6, 294.4, 313.3 333, 354.4, 389.3, 400.8 455.2, 493.6, 547.9, 560.6 674.8, 690.4	738, 850.3, 944.2, 1023.5, 1136.6, 1232 1328.9, 1447.2, 1502.9, 1636.7, 1757, 1851 1996, 2164, 2402, 2530, 3027, 3644,

Configuration

Pinion: Metal/Plastic
Ball bearing: Preload
Flange: Standard frange front&back/customize the frange
Shaft: Length/Diameter/Cut face/double shaft/hollow shaft

More:
Special design for high speed/high torque
Details please contact our sales engineer

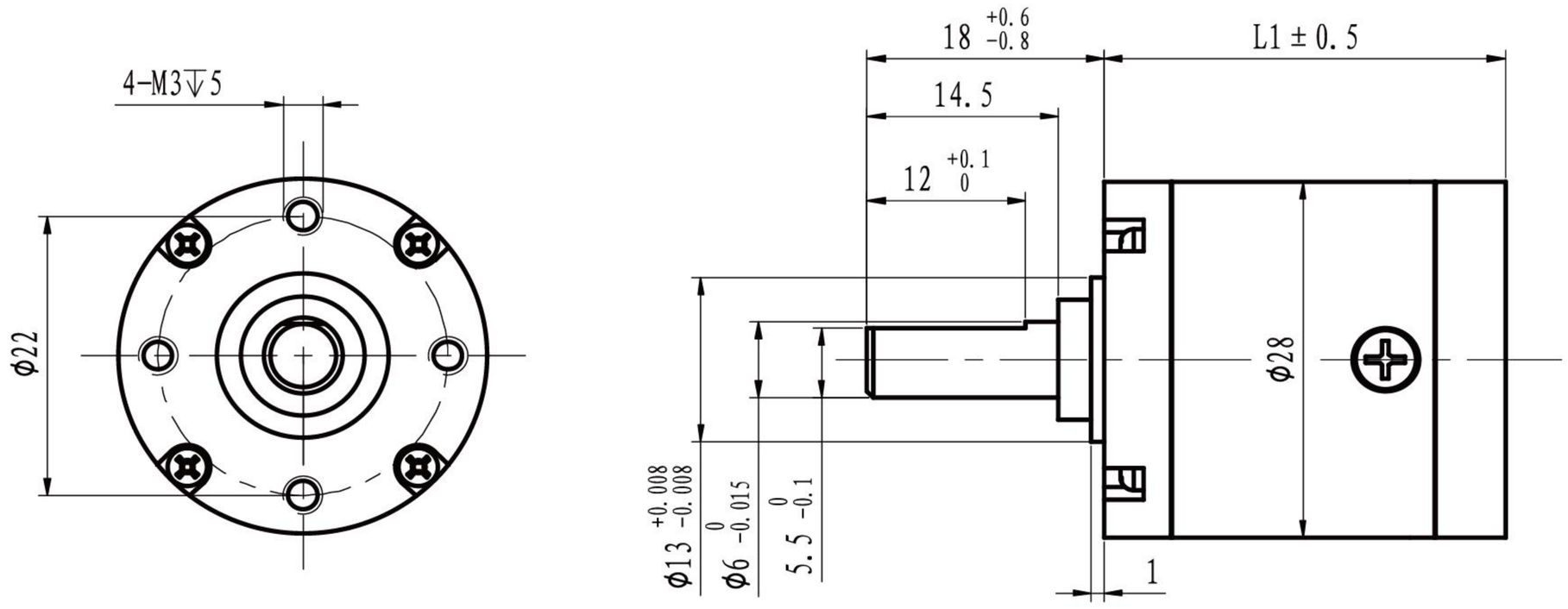

M 1.2:1

			PG28				
Gearhead Data							
1	Housing material				Steel		
2	Geartrain material				Steel		
3	Bearing type on output shaft				Ball bearing		
4	Max. radial load (10mm from flange)	N			58.8		
5	Max. axial load	N			29.4		
6	Radial play of shaft	mm			0.04		
7	Thrust play of shaft	mm			0.4		
8	Bcaklash at no load	°			2		
9	Max. continuous speed	rpm			36000		
10	Operating temperatue range	℃			-30..+100		
11	Number of stages		1	2	3	4	
12	Max continuous torque	Nm	1.55	2.1	2.6	3.1	
13	Max. intermittent torque	Nm	3.1	4.2	5.2	6.2	
14	Max. efficiency	%	90	83	77	72	
15	Gearhead length L1	mm	28.4	34.7	41	47.3	
16	Ratio	X:1	4.4, 5.2, 6.7, 8.3	15.1, 16.9, 18, 20.1, 23.1, 25.6 27.6, 29.3, 31.8, 35, 43.5, 55.2,	61.7, 68,7, 77,1, 87,6, 100.6, 109, 120, 125, 129, 134.1 139.8, 144.7 149.1, 154 166.8, 183.8 211.7, 243 264.5, 290	335.9, 385.5, 411.4, 494.8, 528, 630, 677.6, 705.8 759.7, 860.4 964.7, 1069 1158, 1276, 1523, 1755, 2014, 3051 3792, 4713	

Configuration

Pinion: Metal/Plastic
Ball bearing: Preload
Flange: Standard frange front&back/customize the frange
Shaft: Length/Diameter/Cut face/double shaft/hollow shaft

More:
Special design for high speed/high torque
Details please contact our sales engineer

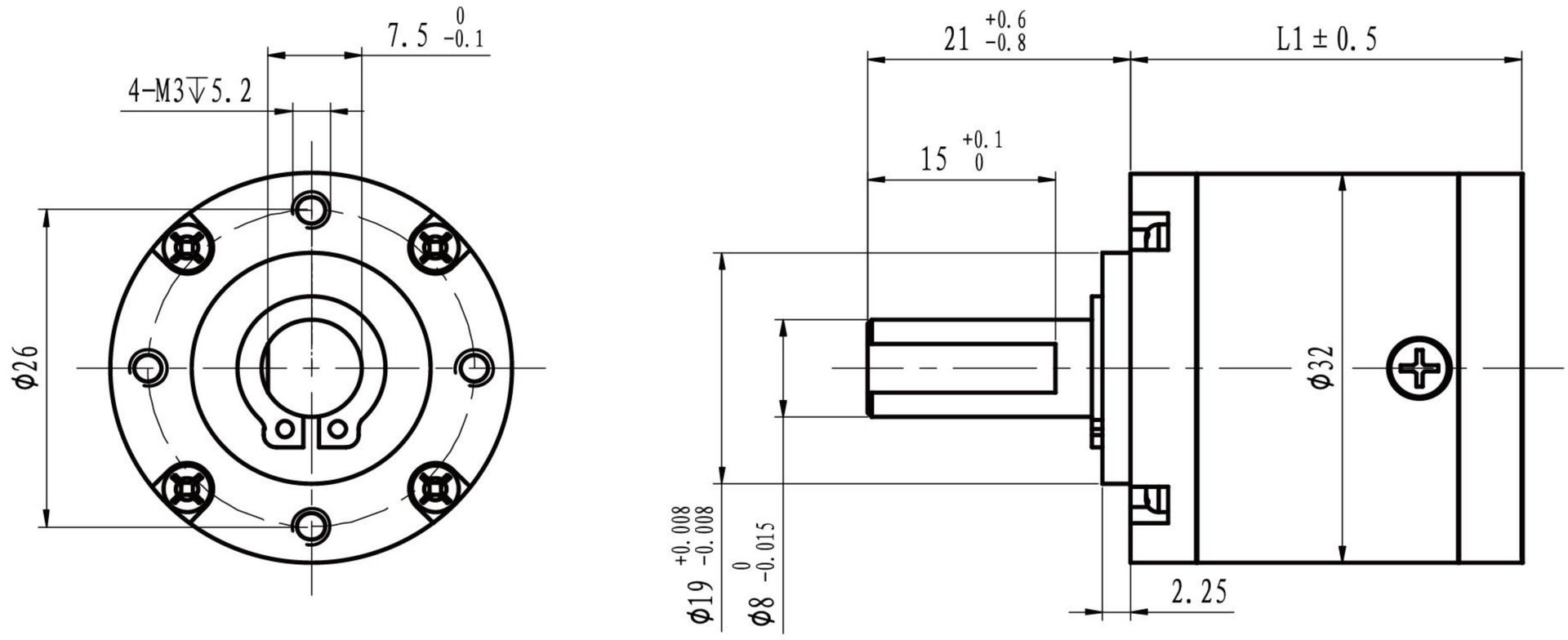

M 1.2:1

			PG32				
Gearhead Data							
1	Housing material				Steel		
2	Geartrain material				Steel		
3	Bearing type on output shaft				Ball bearing		
4	Max. radial load (10mm from flange)	N			98		
5	Max. axial load	N			58.8		
6	Radial play of shaft	mm			0.04		
7	Thrust play of shaft	mm			0.4		
8	Bcaklash at no load	°			2		
9	Max. continuous speed	rpm			36000		
10	Operating temperatue range	℃			-30..+100		
11	Number of stages		1	2	3	4	
12	Max continuous torque	Nm	2.34	3.1	3.88	4.65	
13	Max. intermittent torque	Nm	4.68	6.2	7.76	9.3	
14	Max. efficiency	%	90	83	77	72	
15	Gearhead length L1	mm	31.2	38.7	46.2	53.7	
16	Ratio	X:1	4.4, 5.2, 6.7, 8.3	15.1, 16.9, 18, 20.1, 23.1, 25.6 27.6, 29.3, 31.8, 35, 43.5, 55.2,	61.7, 68,7, 77,1, 87,6, 100.6, 109, 120, 125, 129, 134.1 139.8, 144.7 149.1, 154 166.8, 183.8 211.7, 243 264.5, 290	335.9, 385.5, 411.4, 494.8, 528, 630, 677.6, 705.8 759.7, 860.4 964.7, 1069 1158, 1276, 1523, 1755, 2014, 3051 3792, 4713	

Configuration

Pinion: Metal/Plastic
Ball bearing: Preload
Flange: Standard frange front&back/customize the frange
Shaft: Length/Diameter/Cut face/double shaft/hollow shaft

More:
Special design for high speed/high torque
Details please contact our sales engineer

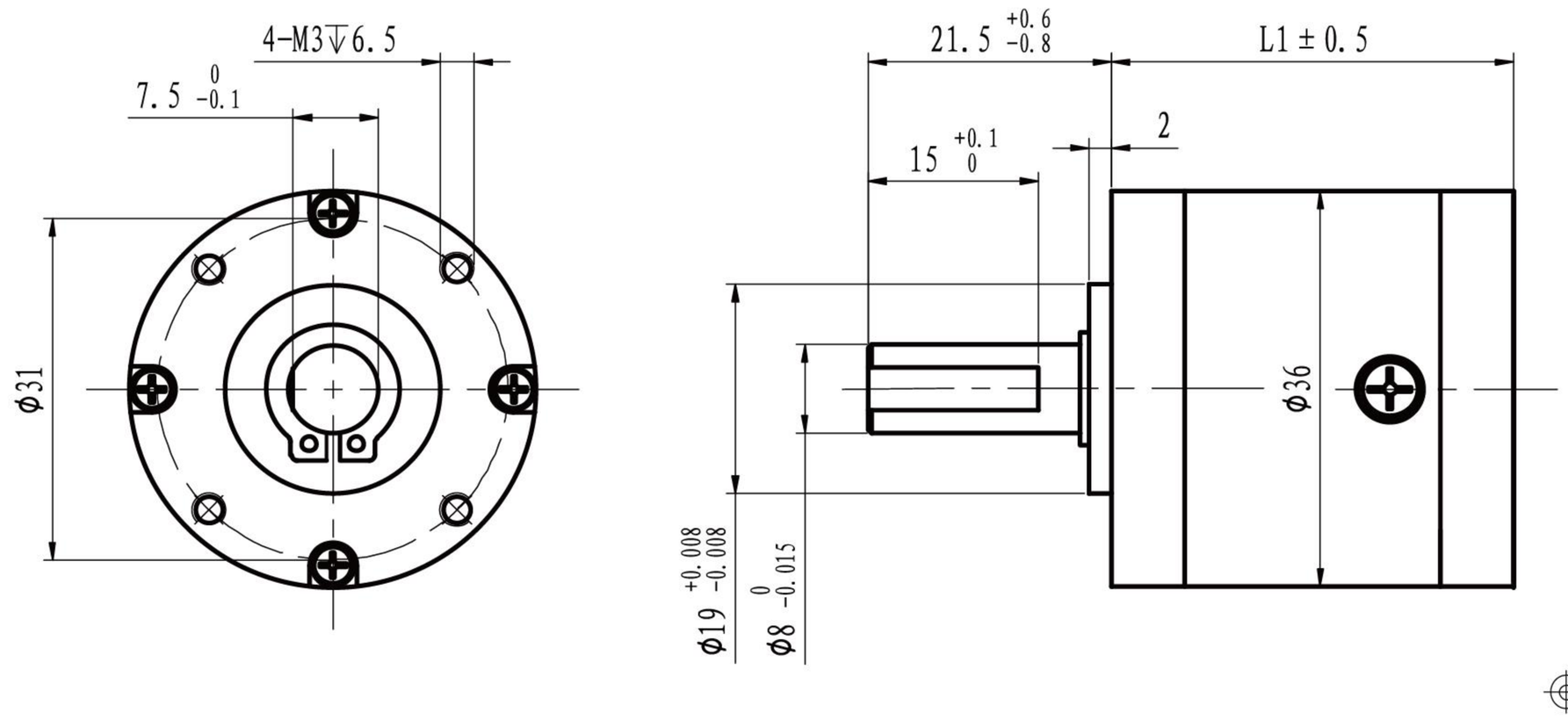

			PG36				
Gearhead Data							
1	Housing material		Steel				
2	Geartrain material		Steel				
3	Bearing type on output shaft		Ball bearing				
4	Max. radial load (10mm from flange)	N	98				
5	Max. axial load	N	58.8				
6	Radial play of shaft	mm	0.04				
7	Thrust play of shaft	mm	0.4				
8	Bcaklash at no load	°	2				
9	Max. continuous speed	rpm	30000				
10	Operating temperatue range	℃	-30..+100				
11	Number of stages		1	2	3	4	
12	Max continuous torque	Nm	3.24	4.32	5.4	6.48	
13	Max. intermittent torque	Nm	6.48	8.64	10.8	13	
14	Max. efficiency	%	90	83	77	72	
15	Gearhead length L1	mm	35.6	44.2	52.8	61.4	
16	Ratio	X:1	4.3, 5.1, 6.3, 7.6	14.7, 16.3, 18.6, 19.2, 21.9, 23.9, 25.8, 27.2, 28.9, 32 38.7, 39.7, 48, 58.1	65.6, 74.6, 81.4, 90.5, 98.5, 109, 112.1, 124.6, 123, 141.8, 150.4, 162.4, 171.2, 182, 196.5, 220.3 243.9, 250.7	277.4, 302.6, 335.8, 351, 382.2, 413.2, 459.3, 500.1, 537.4, 583.5, 620.6, 686.9, 744.7, 824.4, 869, 924.2 1006, 1388, 1680, 3380	

Configuration

Pinion: Metal/Plastic
Ball bearing: Preload
Flange: Standard frange front&back/customize the frange
Shaft: Length/Diameter/Cut face/double shaft/hollow shaft

More:
Special design for high speed/high torque
Details please contact our sales engineer

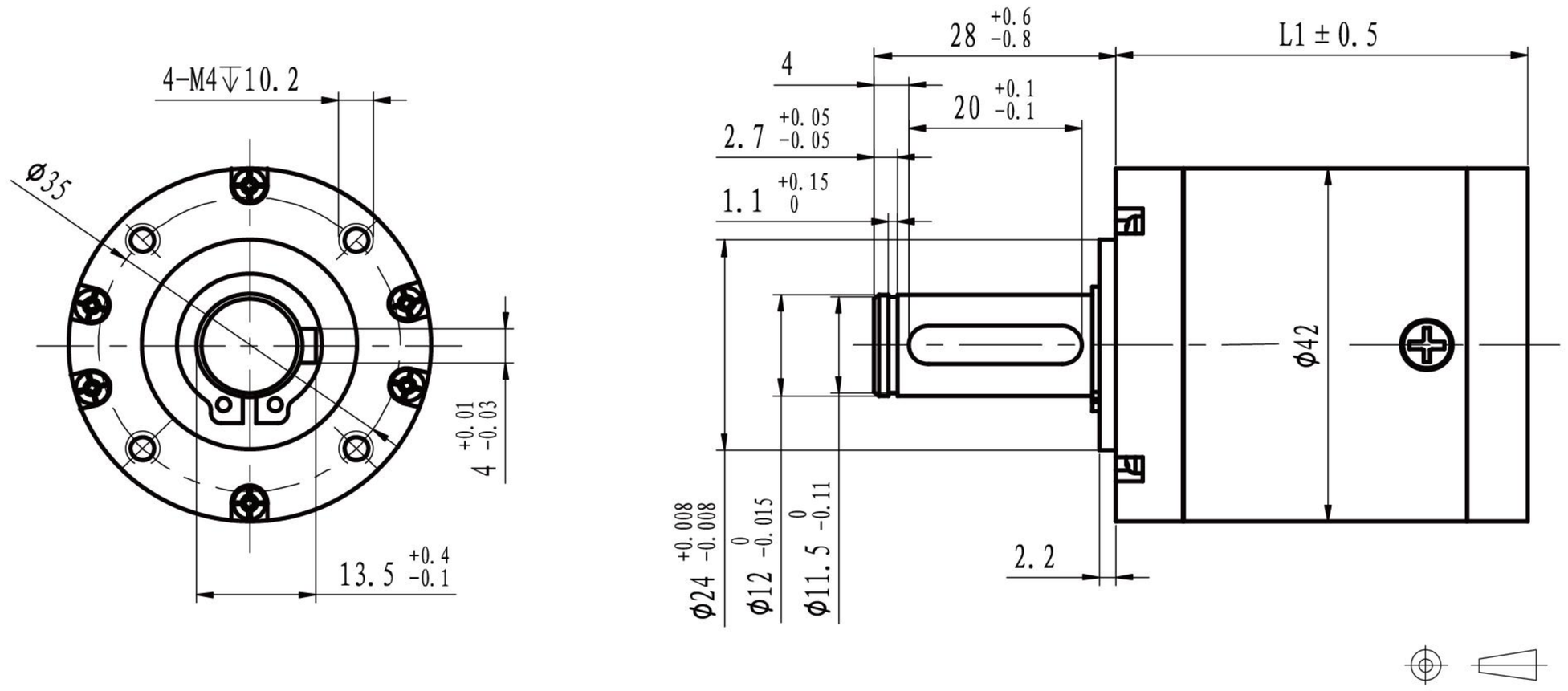

			PG42				
Gearhead Data							
1	Housing material				Steel		
2	Geartrain material				Steel		
3	Bearing type on output shaft				Ball bearing		
4	Max. radial load (10mm from flange)	N			196		
5	Max. axial load	N			98		
6	Radial play of shaft	mm			0.04		
7	Thrust play of shaft	mm			0.4		
8	Bcaklash at no load	°			2		
9	Max. continuous speed	rpm			30000		
10	Operating temperatue range	℃			-30..+100		
11	Number of stages		1	2	3	4	
12	Max continuous torque	Nm	6.5	8.6	10.8	13	
13	Max. intermittent torque	Nm	13	17.2	21.6	26	
14	Max. efficiency	%	90	83	77	72	
15	Gearhead length L1	mm	43.8	54.6	65.4	76	
16	Ratio	X:1	4.3, 5.1, 6.3, 7.6	14.7, 16.3, 18.6, 19.2, 21.9, 23.9, 25.8, 27.2, 28.9, 32 38.7, 39.7, 48, 58.1	65.6, 74.6, 81.4, 90.5, 98.5, 109, 112.1, 124.6, 123, 141.8, 150.4, 162.4, 171.2, 182, 196.5, 220.3 243.9, 250.7	277.4, 302.6, 335.8, 351, 382.2, 413.2, 459.3, 500.1, 537.4, 583.5, 620.6, 686.9, 744.7, 824.4, 869, 924.2 1006, 1388, 1680, 3380	

Configuration

Pinion: Metal/Plastic
Ball bearing: Preload
Flange: Standard frange front&back/customize the frange
Shaft: Length/Diameter/Cut face/double shaft/hollow shaft

More:
Special design for high speed/high torque
Details please contact our sales engineer

GS16, Φ16mm

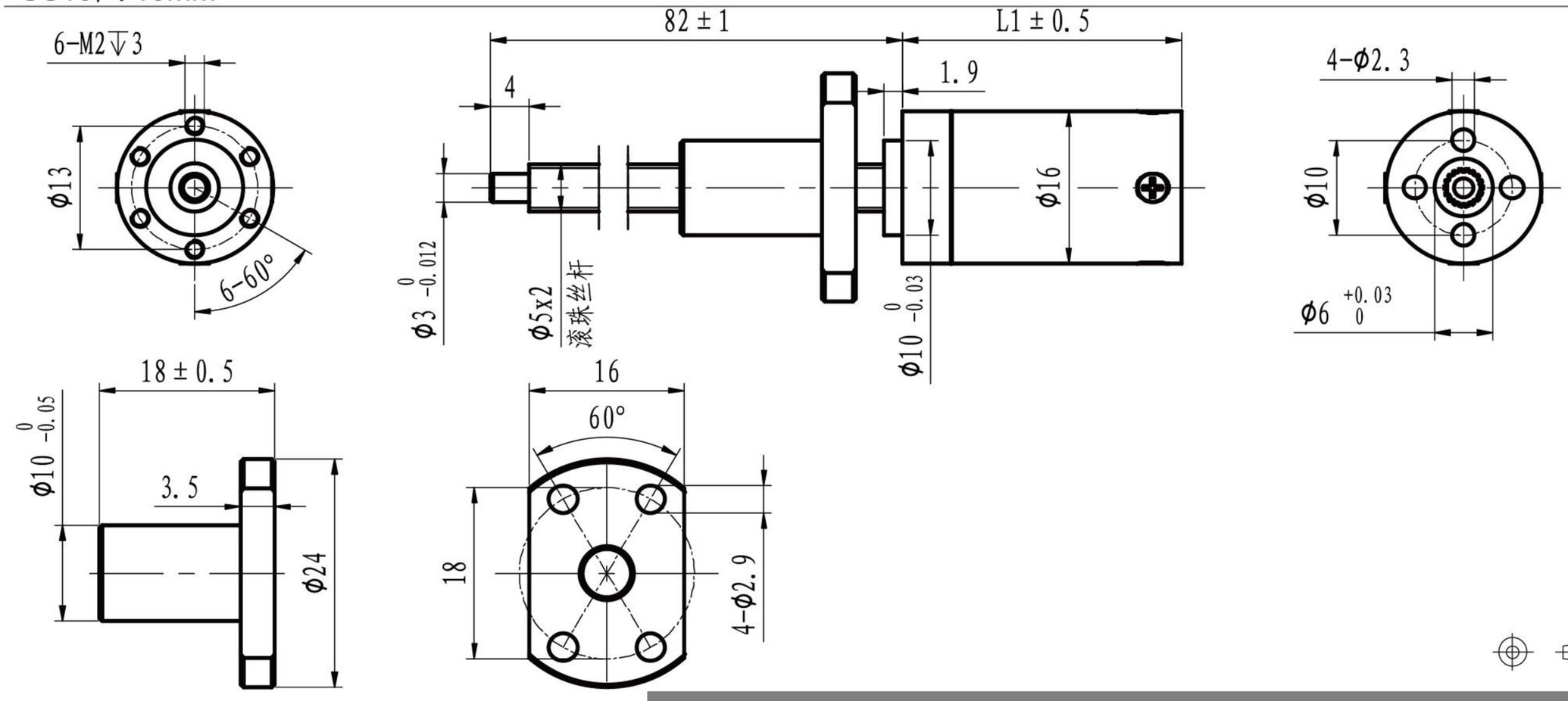

M 1:1

		GS16				
Gearhead Data						
1 Housing material		Steel				
2 Geartrain material		Steel				
3 Bearing type on output shaft		Ball bearing				
4 Max. radial load (5mm from flange)	N	60				
5 Max. axial load	N	400				
6 Radial play of shaft	mm	0.04				
7 Axial play	mm	preloaded				
8 Max. continuous speed	rpm	12000				
9 Operating temperatue range	℃	-20..+100				
10 Number of stages		1	2	3	4	
11 Max. continuous feed force	N	60	110	200	280	
12 Max. intermittent feed force	N	120	220	400	400	
13 Max. efficiency	%	80	72	63	55	
14 Bcaklash at no load	°	1.5	2	2	2.2	
15 Mechanical positioning accuracy	mm	0.045	0.045	0.05	0.05	
16 Gearhead length L1	mm	22.7	28.7	33	37.3	
17 Ratio	X:1	3.55, 3.95 5.31	13, 14 16, 19 21, 26 28, 35	45, 50 55, 62 67, 74 83, 92 100, 103 111, 124 138, 150 172, 186 231	158, 176 196, 218 237, 243 263, 293 326, 354 365, 394 406, 439 490, 530 546, 590 610, 659 679, 734 794, 820 987, 1135 1227	

Configuration

Pinion: Metal/Plastic
Ball bearing: Preload
Flange: Standard frange front&back/customize the frange
Shaft: Length/Diameter/Cut face/double shaft/hollow shaft

More:
Special design for high speed/high torque
Details please contact our sales engineer

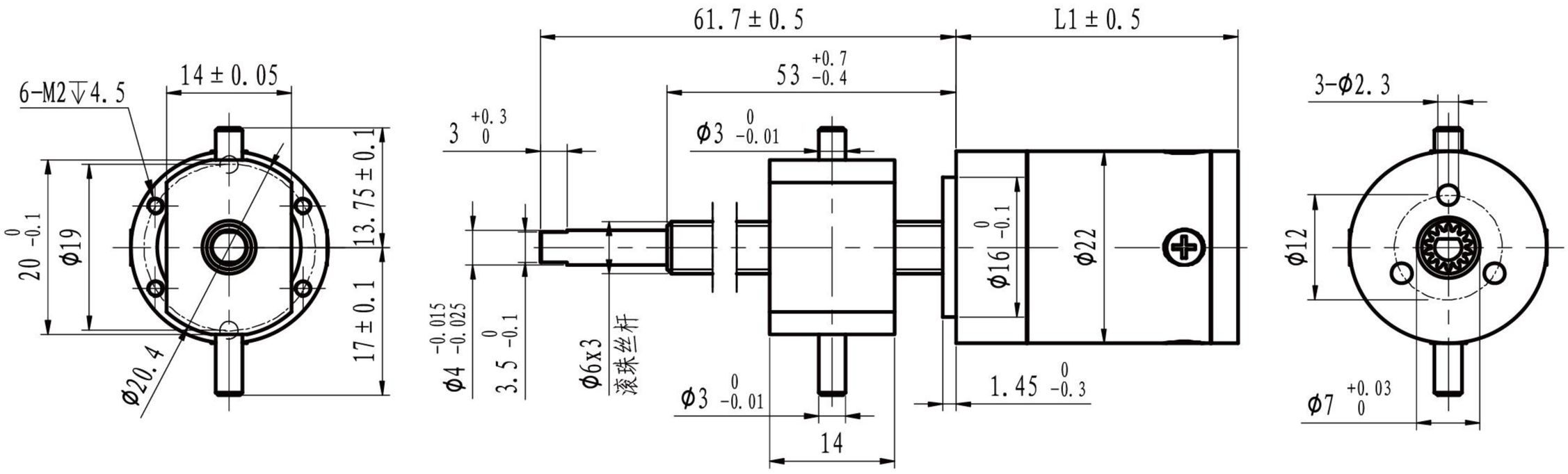

M 1:1

			GS22			
Gearhead Data						
1	Housing material		Steel			
2	Geartrain material		Steel			
3	Bearing type on output shaft		Ball bearing			
4	Max. radial load (10mm from flange)	N	100			
5	Max. axial load	N	600			
6	Radial play of shaft	mm	0.04			
7	Axial play	mm	preloaded			
8	Max. continuous speed	rpm	8000			
9	Operating temperatue range	℃	-20..+100			
10	Number of stages		1	2	3	4
11	Max. continuous feed force	N	110	200	290	400
12	Max. intermittent feed force	N	220	400	500	550
13	Max. efficiency	%	80	72	63	55
14	Bcaklash at no load	°	1	1.2	1.6	1.6
15	Mechanical positioning accuracy	mm	0.04	0.04	0.045	0.045
16	Gearhead length L1	mm	31.5	38.5	43	47.5
17	Ratio	X:1	3.7, 4.3	12, 14	40, 45	150, 168
				16, 18	47, 51	173, 186
				19, 22	52, 59	194, 209
				25, 29	61, 63	218, 225
					68, 71	235, 242
					73, 79	252, 264
					82, 93	272, 292
					95, 100	305, 315
					107, 115	328, 337
					124, 130	344, 353
					169	369, 380
						397, 409
						426, 480
						493, 516
						531, 556
						596, 626
						642, 672
						777, 837
						1012, 1140

Configuration

Pinion: Metal/Plastic
Ball bearing: Preload
Flange: Standard frange front&back/customize the frange
Shaft: Length/Diameter/Cut face/double shaft/hollow shaft

More:
Special design for high speed/high torque
Details please contact our sales engineer

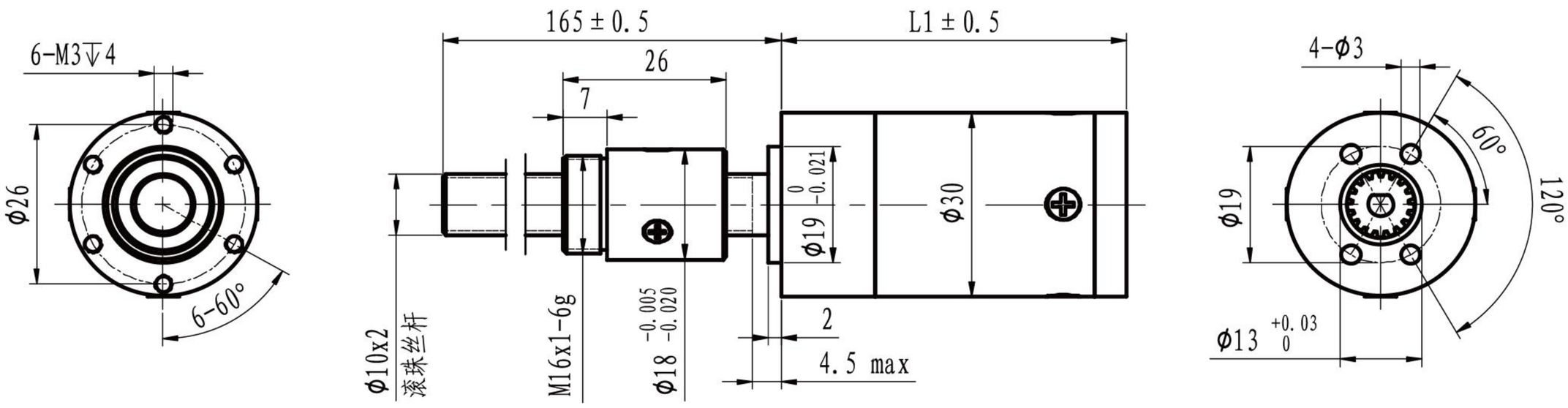

M 1:1.5

			GS30			
Gearhead Data						
1	Housing material				Steel	
2	Geartrain material				Steel	
3	Bearing type on output shaft				Ball bearing	
4	Max. radial load (10mm from flange)	N			100	
5	Max. axial load	N			600	
6	Radial play of shaft	mm			0.04	
7	Axial play	mm			preloaded	
8	Max. continuous speed	rpm			8000	
9	Operating temperatue range	℃			-20..+100	
10	Number of stages		1	2	3	4
11	Max. continuous feed force	N	500	1000	1500	2000
12	Max. intermittent feed force	N	1000	2000	2500	2700
13	Max. efficiency	%	80	72	63	55
14	Bcaklash at no load	°	0.8	1	1	1.5
15	Mechanical positioning accuracy	mm	0.045	0.045	0.055	0.055
16	Gearhead length L1	mm	45.5	55	61.7	68.4
17	Ratio	X:1	3.11, 3.71 4.8	10, 12 14, 15 18, 21 23, 28	45, 50 55, 62 67, 74 83, 92 100, 103 111, 124 138, 150 172, 186 231	30, 36 43, 46 51, 55 66, 72 79, 86 103, 111 123, 132 159, 173 190, 206 223, 246 266, 295 318, 381 412, 456 492, 531 589, 636 706, 762

Configuration

Pinion: Metal/Plastic
Ball bearing: Preload
Flange: Standard frange front&back/customize the frange
Shaft: Length/Diameter/Cut face/double shaft/hollow shaft

More:
Special design for high speed/high torque
Details please contact our sales engineer

Vishan

Motor controller

Model	Type	Voltage (mNm)	Rated Current (A)	Page
VSC 3002S	Sensor	10-30	2	132
VSC 3003S	Sensor	8-30	3	132
VSC 4806S	Sensor	8-48	6	133
VSC 4812S	Sensor	8-48	12	133
VSC 3003L	Sensorless	8-30	3	134
VSC 4806L	Sensorless	8-48	6	134
VSC 3003SL	Compatible	10-30	3	135
VMC 2403S	Motion control	10-28	3	136

Our brushless DC motor controller can drive Hall and non-Hall motors, as well as servo motors, and can be customized with flexible functions and dimensions to better suit your products.

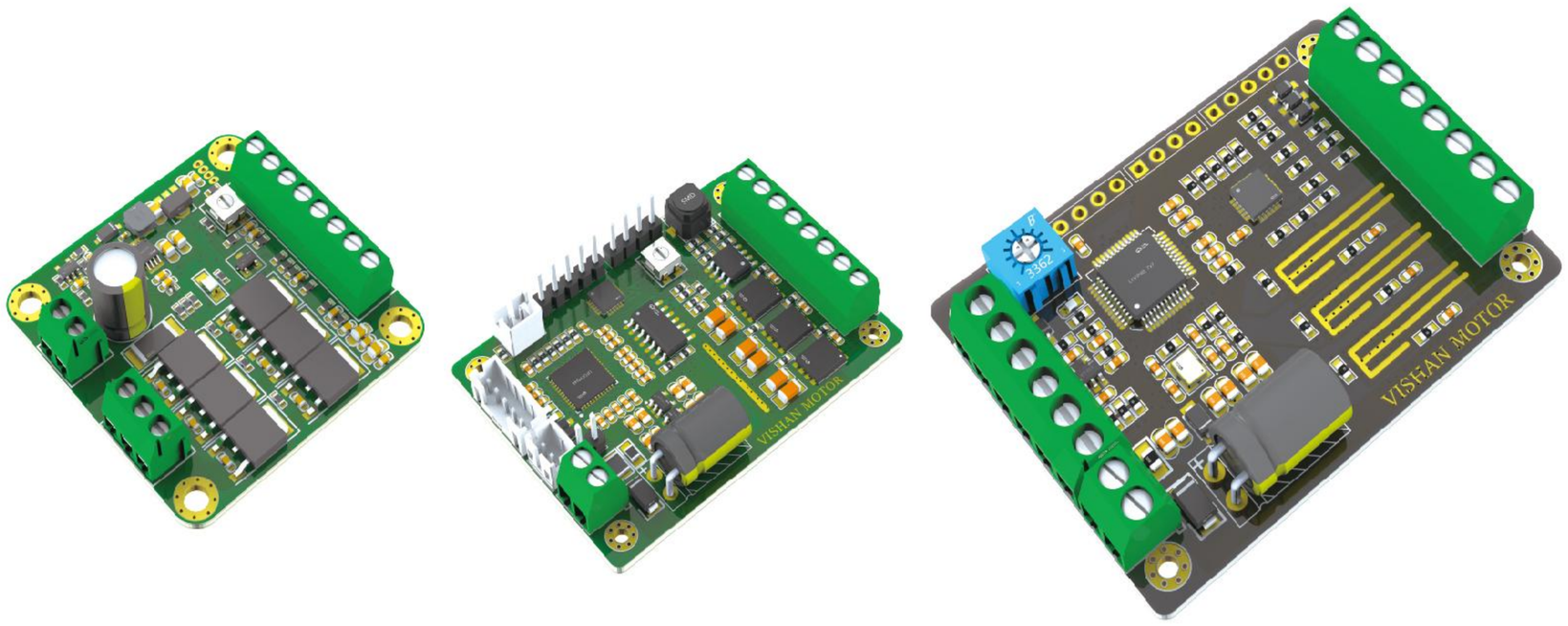

Basic Data:

For motor with hallsenor/without hallsensor
For Motion control
Operate voltage range:4.5V-48VDC
Maximun continuous current: 30A
MaximumPermissiblespeed: 1,00,000rpm
Operate temperature: -30°C-+80°C

	VSC 3002S	VSC 3003S
Operating Mode		
	10-30VDC, Max. Current 2A Speed controller with hall sensor, Open loop Overload protection Stall protection Sensor error protection	8-30VDC, Max. Current 3A Speed controller with hall sensor, Open loop Overload protection Stall protection Sensor error protection
Electrical Data		
1 DC motor up to	60W	90W
2 Operating Voltage Vcc	10-30 VDC	8-30 VDC
3 Max.output current	5A , <60S	5A , <60S
4 Continuous output current	2A	3A
5 Pulse width modulation frequency	20KHz	20KHz
6 Sampling rate PI current controller	20KHz	20KHz
7 Max.Speed (1 pole pair)	60000rpm	60000rpm
8 Efficiency	92%	92%
Inputs/Outputs		
9 Hall sensor signal	HA,HB,HC	HA,HB,HC
10 Digital inputs/outputs	4	5
11 Set value "SP"	Set value speed 0…. +5V (1024 steps)	Set value speed 0…. +5V (1024 steps)
12 Enable "EN"	Enable 0…+5V	Enable 0…+5V
13 Direction "F/R"	Direction 0…+5V	Direction 0…+5V
14 Brake "BK"	Brake 0…+5V	Brake 0…+5V
15 Speed Feedback "PG"	- - -	TTL
16 Status Indicators	Operation: LED light/Blink at 1 HZ; Error: LED Blink at 20Hz	
17 Hall sensor supply voltage	+5 VDC	+5 VDC
18 Hall & Digital signal ground	GND	GND
Environmental Conditions		
18 Temperature - Operation	-30....+45℃	-30....+45℃
19 Temperature - Storage	-40....+85℃	-40....+85℃
Mechanical Data		
20 Weight	Approx. 15 g	Approx. 20 g
21 Dimensisons (L x W x H)	30 x 39 x 14mm	45 x 45 x16.2mm
22 Mounting holes	for screws M2	for screws M3
23 Connections		

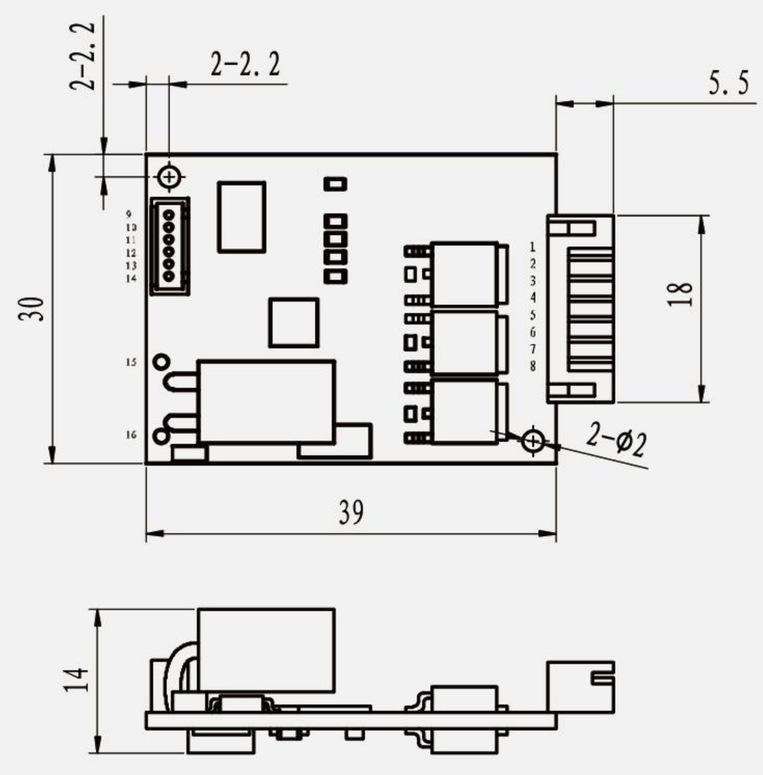

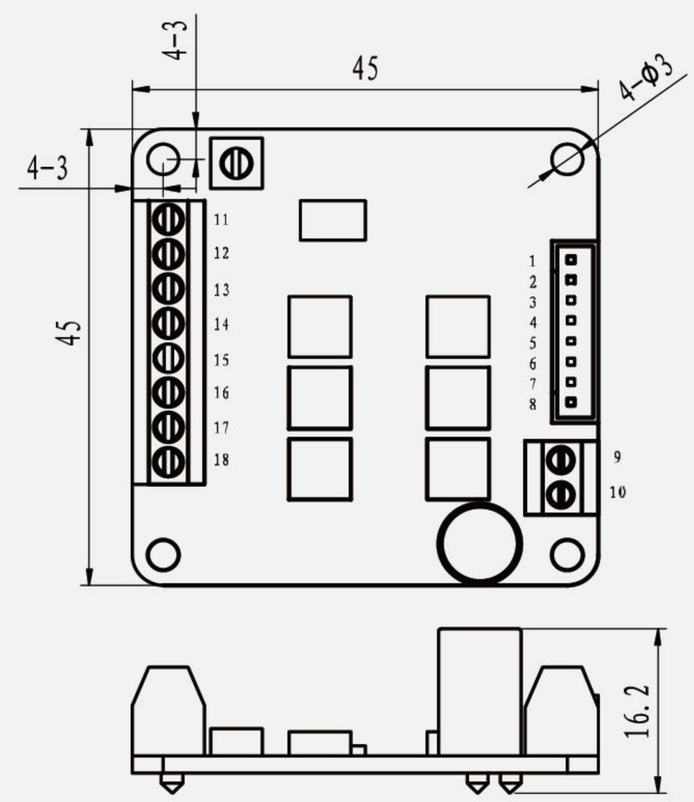

Pin9	BK	Pin1	+5V, Output
Pin10	SP	Pin2	HA
Pin11	F/R	Pin3	HB
Pin12	EN	Pin4	HC
Pin13	+5V, Output	Pin5	GND
Pin14	GND	Pin6	MA
Pin15	POWER +	Pin7	MB
Pin16	POWER -	Pin8	MC

Pin11	PG	Pin1	+5V, Output
Pin12	SP	Pin2	HA
Pin13	GND	Pin3	HB
Pin14	GND	Pin4	HC
Pin15	+5V, Output	Pin5	GND
Pin16	EN	Pin6	MA
Pin17	F/R	Pin7	MB
Pin18	BK	Pin8	MC
		Pin9	POWER +
		Pin10	POWER -

	VSC 4806S	VSC 4812S
Operating Mode		
	8-48VDC, Max. Current 6A Speed controller with hall sensor, Open loop Overload protection Stall protection Sensor error protection	8-48VDC, Max. Current 12A Speed controller with hall sensor, Open loop Overload protection Stall protection Sensor error protection
Electrical Data		
1 DC motor up to	300W	600W
2 Operating Voltage Vcc	8-48 VDC	8-48 VDC
3 Max.output current	8A , <30S	15A , <30S
4 Continuous output current	6A	12A
5 Pulse width modulation frequency	20KHz	20KHz
6 Sampling rate PI current controller	20KHz	20KHz
7 Max.Speed (1 pole pair)	60000rpm	60000rpm
8 Efficiency	95%	95%
Inputs/Outputs		
9 Hall sensor signal	HA,HB,HC	HA,HB,HC
10 Digital inputs/outputs	3	6
11 Set value "SP"	Set value speed 0…. +5V (1024 steps)	Set value speed 0…. +5V (1024 steps)
12 Enable "EN"	Enable 0…+5V	Enable 0…+5V
13 Direction "F/R"	Direction 0…+5V	Direction 0…+5V
14 Brake "BK"	- - -	Brake 0…+5V
15 Speed Feedback "PG"	- - -	OC ouput(30V/10mA max)
16 Alarm Ouput "ALARM"	- - -	OC ouput(30V/10mA max)
17 Status Indicators	Operation: LED light/Blink at 1 HZ; Error: LED Blink at 20Hz	
18 Hall sensor supply voltage	+5 VDC	+5 VDC
19 Hall & Digital signal ground	GND	GND
Environmental Conditions		
20 Temperature - Operation	-30....+45℃	-30....+45℃
21 Temperature - Storage	-40....+85℃	-40....+85℃
Mechanical Data		
22 Weight	Approx. 90 g	Approx. 300 g
23 Dimensisons (L x W x H)	55 x 86 x 21mm	80 x 143 x33mm
24 Mounting holes	for screws M3	for screws M3
25 Connections	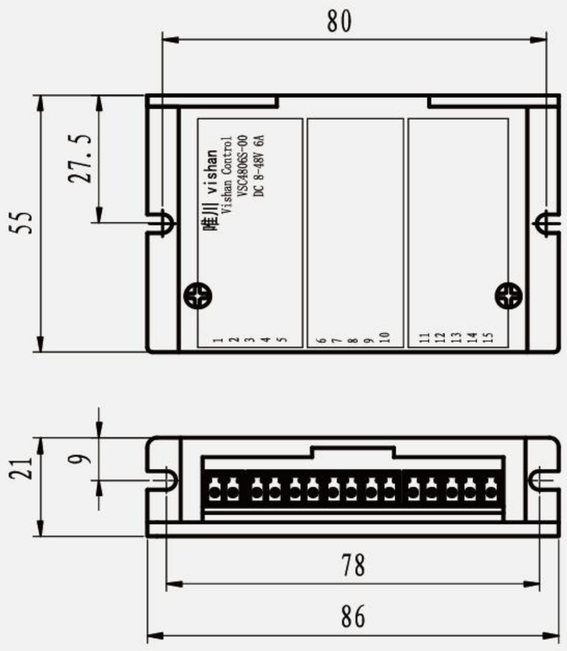	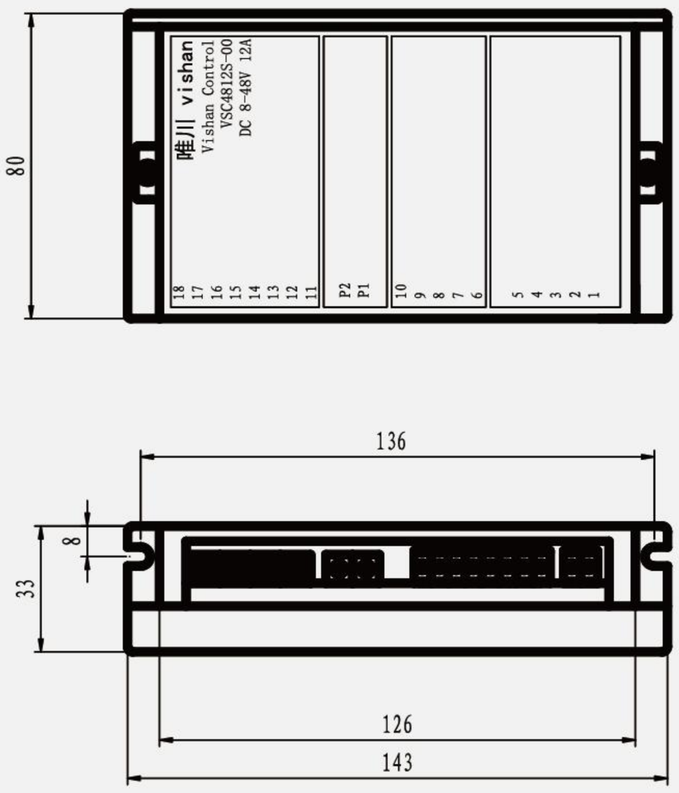

Pin9	BK	Pin1	+5V, Output
Pin10	SP	Pin2	HA
Pin11	F/R	Pin3	HB
Pin12	EN	Pin4	HC
Pin13	+5V, Output	Pin5	GND
Pin14	GND	Pin6	MA
Pin15	POWER +	Pin7	MB
Pin16	POWER -	Pin8	MC

Pin11	PG	Pin1	+5V, Output
Pin12	SP	Pin2	HA
Pin13	GND	Pin3	HB
Pin14	GND	Pin4	HC
Pin15	+5V, Output	Pin5	GND
Pin16	EN	Pin6	MA
Pin17	F/R	Pin7	MB
Pin18	BK	Pin8	MC
		Pin9	POWER +
		Pin10	POWER -

	VSC 3003L	VSC 4806L
Operating Mode		
	8-30VDC, Max. Current 3A Speed controller without sensor, Open loop Overload protection Stall protection CW/CCW control	8-48VDC, Max. Current 6A Speed controller without sensor, Open loop Overload protection Stall protection CW/CCW control
Electrical Data		
1 DC motors up to	90W	300W
2 Operating Voltage Vcc	8-30 VDC	8-48 VDC
3 Max.output current	5A , <60S	8A , <30S
4 Continuous output current	3A	6A
5 Pulse width modulation frequency	16KHz	16KHz
6 Sampling rate PI current controller	16KHz	16KHz
7 Max.Speed (1 pole pair)	50000rpm	50000rpm
8 Efficiency	92%	95%
Inputs/Outputs		
9 Digital inputs/outputs	5	4
10 Set value "RV"	Set value speed 0…. +5V (1024 steps)	Set value speed 0…. +5V (1024 steps)
11 Enable "EN"	Enable 0…+5V	Enable 0…+5V
12 Direction "F/R"	Direction 0…+5V	Direction 0…+5V
13 Brake "BK"	Brake 0…+5V	- - -
14 Speed Feedback "PG"	TTL	OC ouput(30V/10mA max)
15 Status Indicators	Operation: LED light/Blink at 1 HZ; Error: LED Blink at 20Hz	
Environmental Conditions		
16 Temperature - Operation	-30....+45℃	-30....+45℃
17 Temperature - Storage	-40....+85℃	-40....+85℃
Mechanical Data		
18 Weight	Approx. 20 g	Approx. 90 g
19 Dimensisons (L x W x H)	45 x 45 x16.2mm	55 x 86 x 21mm
20 Mounting holes	for screws M3	for screws M3
21 Connections	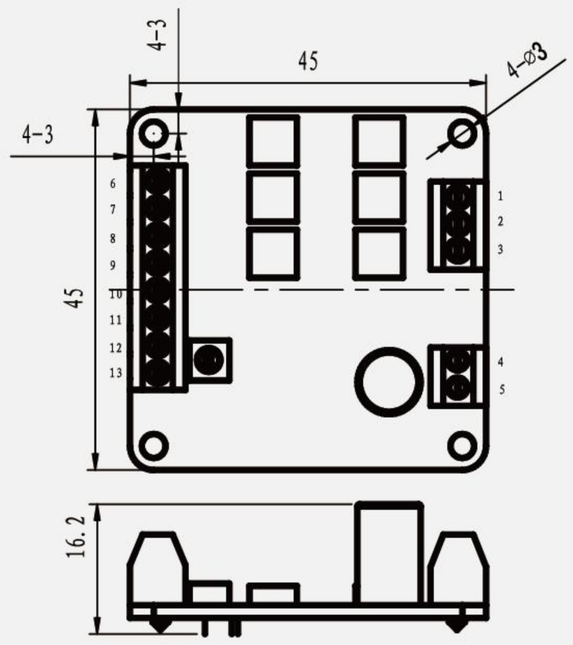	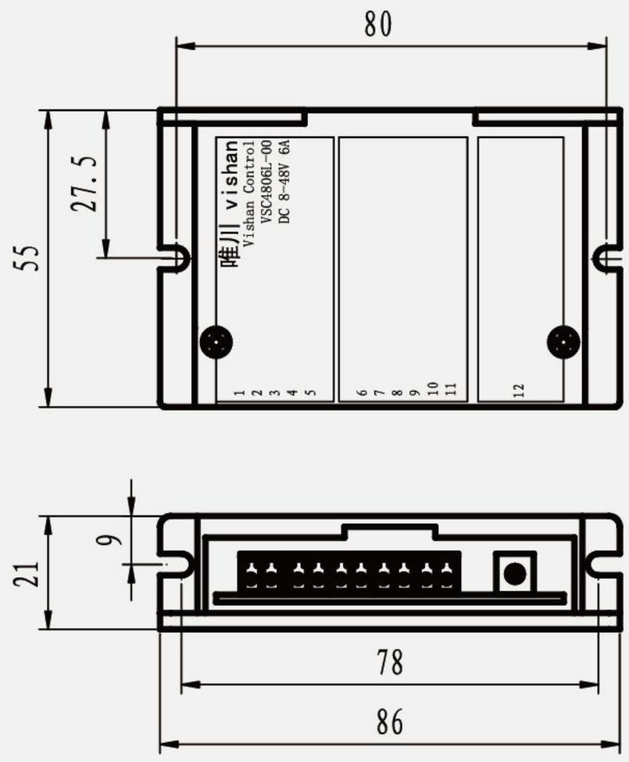

Pin6	PG	Pin1	MC	Pin1	POWER +	Pin6	GND
Pin7	SP	Pin2	MB	Pin2	POWER -	Pin7	PG
Pin8	GND	Pin3	MA	Pin3	MA	Pin8	SP
Pin9	GND	Pin4	POWER -	Pin4	MB	Pin9	F/R
Pin10	+5V, Output	Pin5	POWER +	Pin5	MC	Pin10	EN
Pin11	EN					Pin11	+5V, Output
Pin12	F/R						
Pin13	BK						

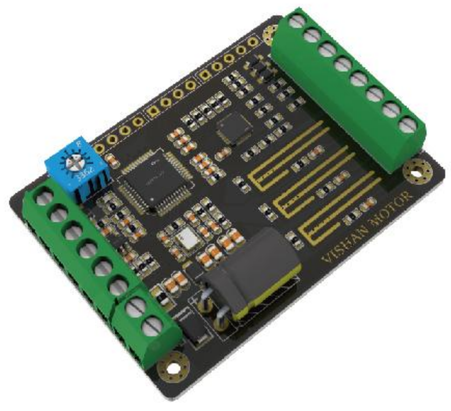

	VSC 3003SL	
Operating Mode		
	10-28V, Max.Current 3 A Speed controller compatible with sensor and sensorless Over voltage protection Over current protecion Over temperature protecl ` Stall protection	
Electrical Data		
1 DC motor up to	100W	
2 Operating Voltage Vcc	10-30VDC	
3 Max.output current	10A(<20S)	
4 Continuous output current	3A	
5 Pulse width modulation frequency	20KHZ	
6 Sampling rate PI current controller	20KHZ	
7 Max.Speed (1 pole pair)	50000rpm	
8 Efficiency	95%	
Inputs/Outputs		
9 Hall sensor signal	HA,HB,HC	
10 Digital inputs/outputs	4	
11 Set value "SP"	Set value speed 0...+5.0V(4096 steps)	
12 Enable "EN"	Enable 0.0V	
13 Direction "F/R"	Direction 0.0V	
14 Brake "BK"	---	
15 Speed Feedback "PG"	OC output(30V/10mA)	
16 Alarm Ouput "ALARM"	OC output(30V/10mA)	
17 Status Indicators	Ready:LED Blink at 2Hz;Error:LED blink at 10Hz	
18 Hall sensor supply voltage	+5 VDC	
19 Hall & Digital signal ground	GND	
Environmental Conditions		
20 Temperature - Operation	-30....+45℃	
21 Temperature - Storage	-40....+85℃	
Mechanical Data		
22 Weight	approx.18.6g	
23 Dimensisons (L x W x H)	55 x 40 x 12.3mm	
24 Mounting holes	for screws M3	
25 Connections	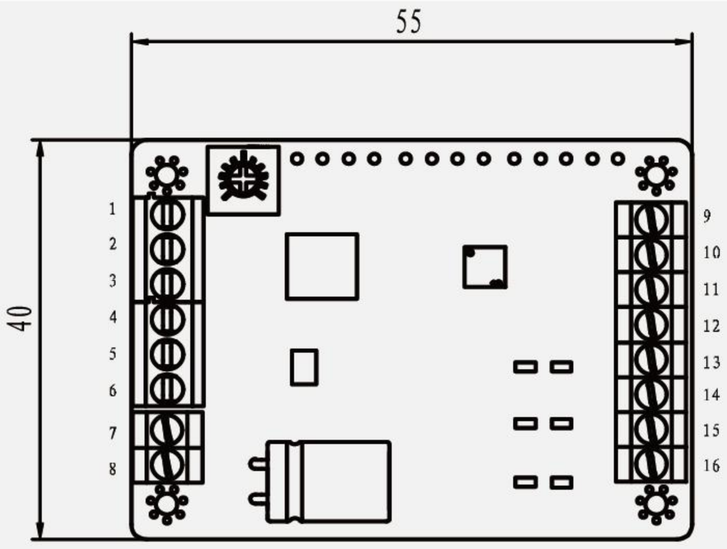	

Pin1	GND	Pin9	3.3V
Pin2	ALM	Pin10	HA
Pin3	FG	Pin11	HB
Pin4	FR	Pin12	HC
Pin5	EN	Pin13	GND
Pin6	SP	Pin14	MA
Pin7	POWER +	Pin15	MB
Pin8	POWER -	Pin16	MC

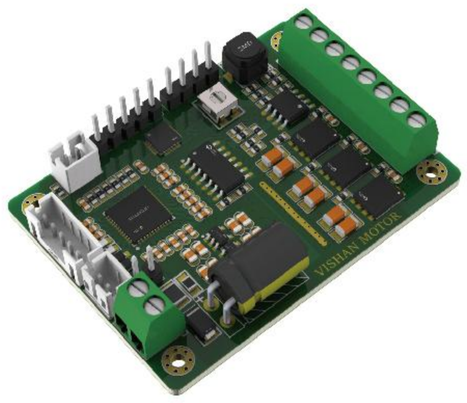

	VMC 2403S
Operating Mode	
	10-28VDC, Max Current 3A Can be configured as position,speed,current mode Over voltage protection Over current protecion Overload protecion Overt emperature proteci ` Enocder error protection
Electrical Data	
1 DC motor up to	100W
2 Operating Voltage Vcc	10-28 VDC
3 Max.output current	10 A(<20S)
4 Continuous output current	3 A
5 Pulse width modulation frequency	20KHz
6 Sampling rate PI current controller	20KHz
7 Sampling rate PI speed controller	2KHz
8 Sampling rate PI current controller	2KHz
9 Max.Speed (1 pole pair)	20000rpm(sinusoidal)
10 Efficiency	98%
Inputs/Outputs	
11 Hall sensor signal	HA,HB,HC
12 Encoder-signal	A, B
13 Hall sensor supply voltage ouput	3.3V
14 Encoder supply voltage output	5.0V
15 Communication interface	RS485
16 Protocol	MODBUS-RTU
17 Baudrate	38400
18 Status Indicators	Ready:green LED light and red LED Blink at 2HZ;Error:green LED Blink at 10Hz and red LED light
Environmental Conditions	
20 Temperature - Operation	-30....+45℃
21 Temperature - Storage	-40....+85℃
Mechanical Data	
22 Weight	Approx. 16.7 g
23 Dimensisons (L x W x H)	55 x 40 x 12.3mm
24 Mounting holes	for screws M2
25 Connections	

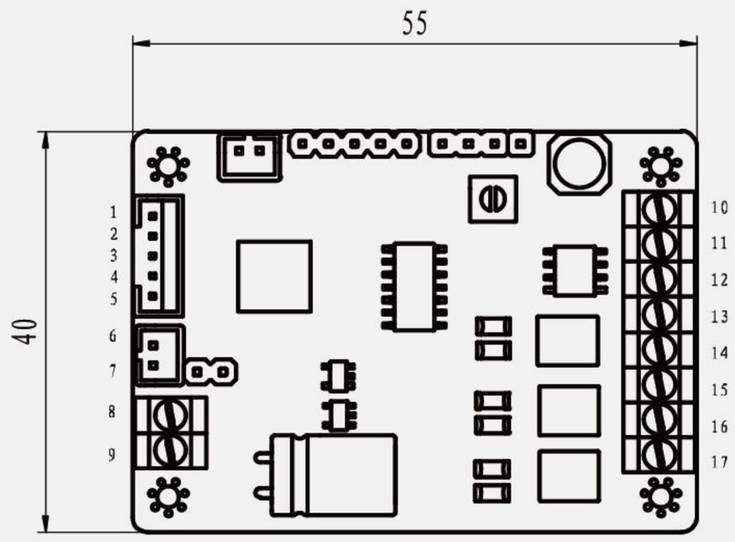

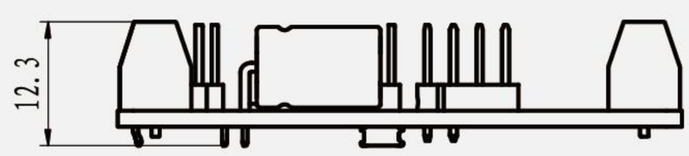

Pin 1	I	Pin10	3.3V
Pin 2	B	Pin11	3.3V
Pin 3	A	Pin12	HB
Pin 4	3.3V	Pin13	HC
Pin 5	GND	Pin14	GND
Pin 6	485_A	Pin15	MA
Pin 7	485_B	Pin16	MB
Pin 8	POWER +	Pin17	MC
Pin 9	POWER -		

Vishan

Encoder

We offer a wide range of flexible encoder options, whether magnetic, optic or absolute, from the smallest Φ8 mm to Φ28 mm, there is a product to suit your application.

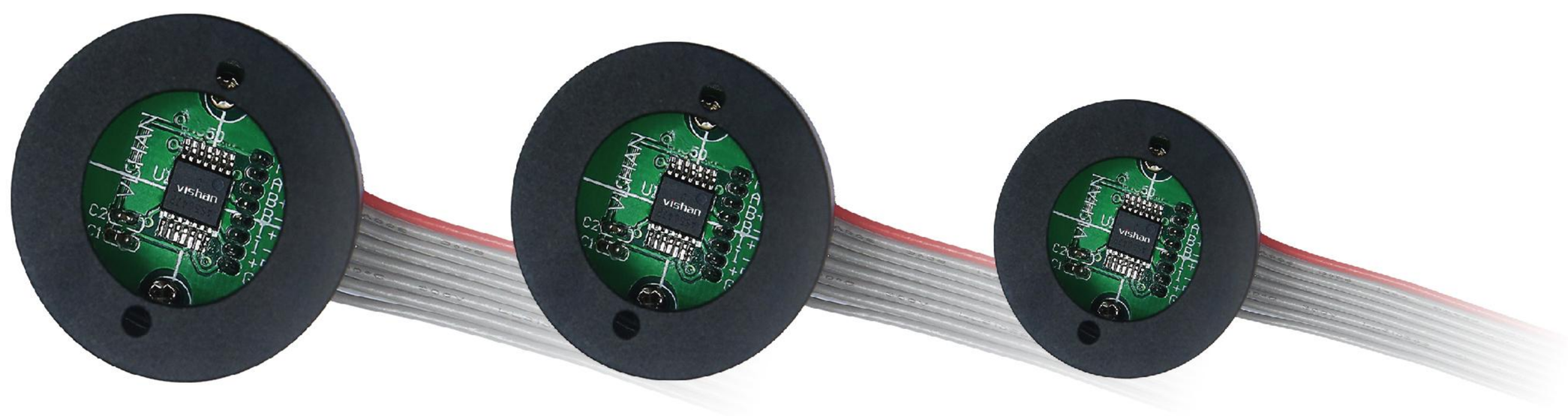

Basic Data:

Magnetic encoders
Optical encoders
High position accuracy, Repeability
And high signal quality
Multifarious function customization

EN22A/EN22AL

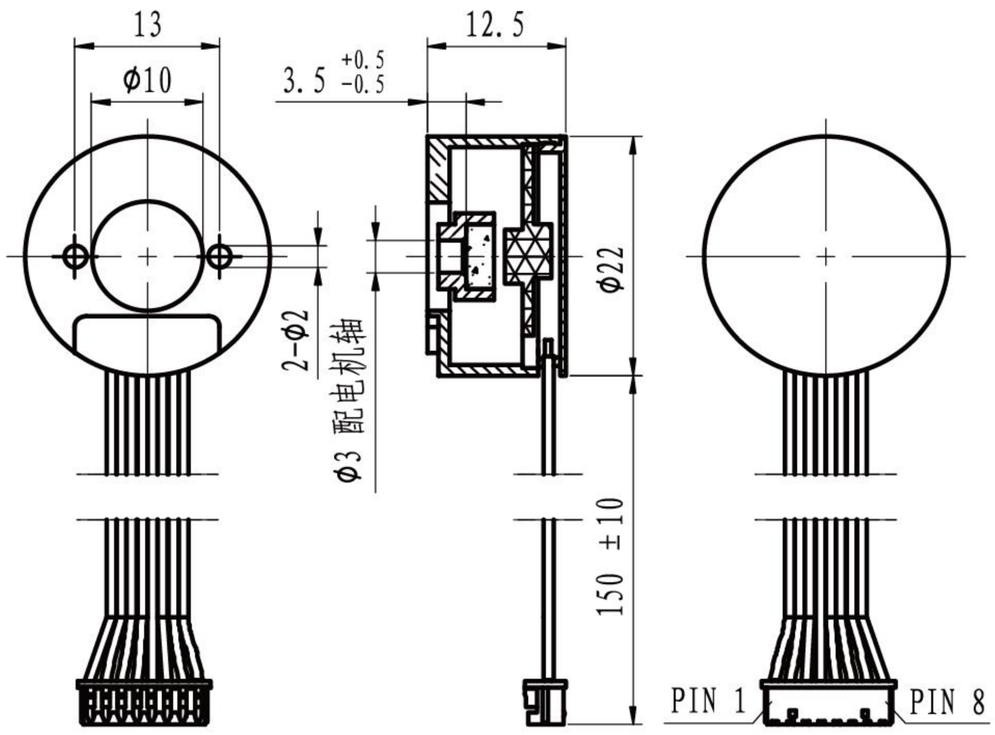

EN22B/EN22BL

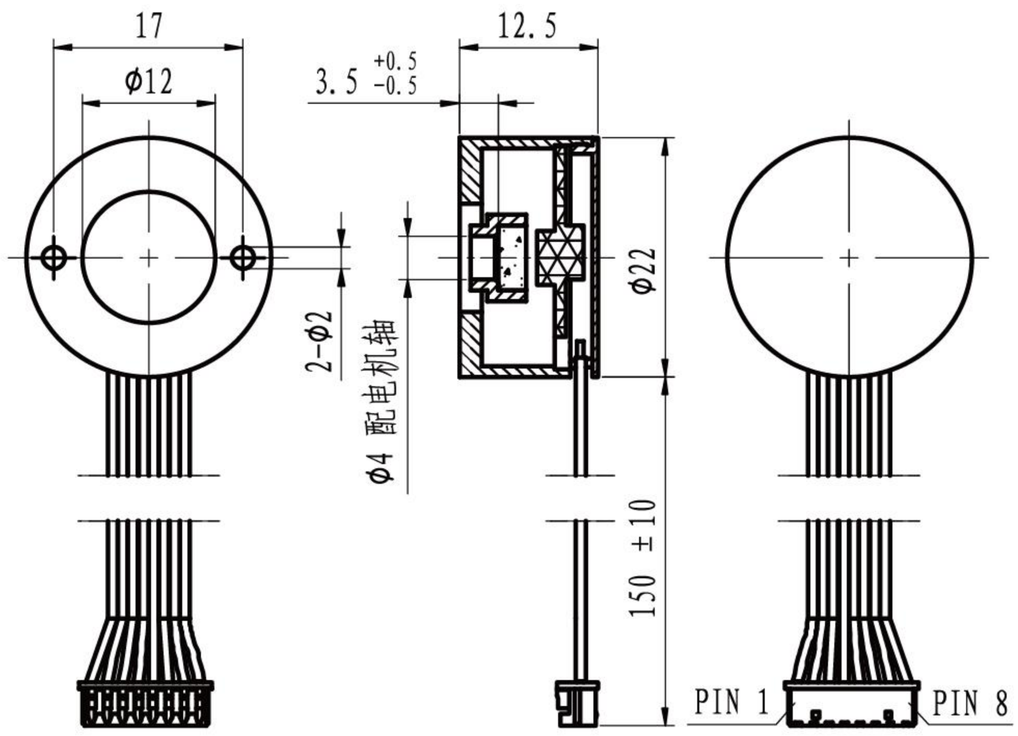

	Without line driver Line driver	EN22A	EN22AL	EN22B	EN22BL
Electrical Data					
1 Lines per revolution		4096	4096	4096	4096
2 Number of channels		3	3	3	3
3 Max. speed	rpm	20000	20000	20000	20000
4 Supply voltage	V	5	5	5	5
5 Output signal		TTL	TTL	TTL	TTL
6 Index pulse width	°e	90	90	90	90
7 Phase shift, Channel A to B	°e	90	90	90	90
8 Interia of code disc	gcm^2	0.7	0.7	0.7	0.7
9 Operating temperature range	℃	-40..+125	-40..+125	-40..+125	-40..+125

Features & Configuration

- Magnetic rotary encoder chip
- Output interface: ABI
- Configuration programmable : Zero position, ABI line per revolution
- ABI binrary pulse count: 4096, 2048, 1024, 512, 256ppr
- Optional line driver : Provide four channal differential line driver with complementary outputs for EN22AL and EN22BL

Output Signals

EN22A/EN22B
with counter-clockwise rotation as from the shaft end

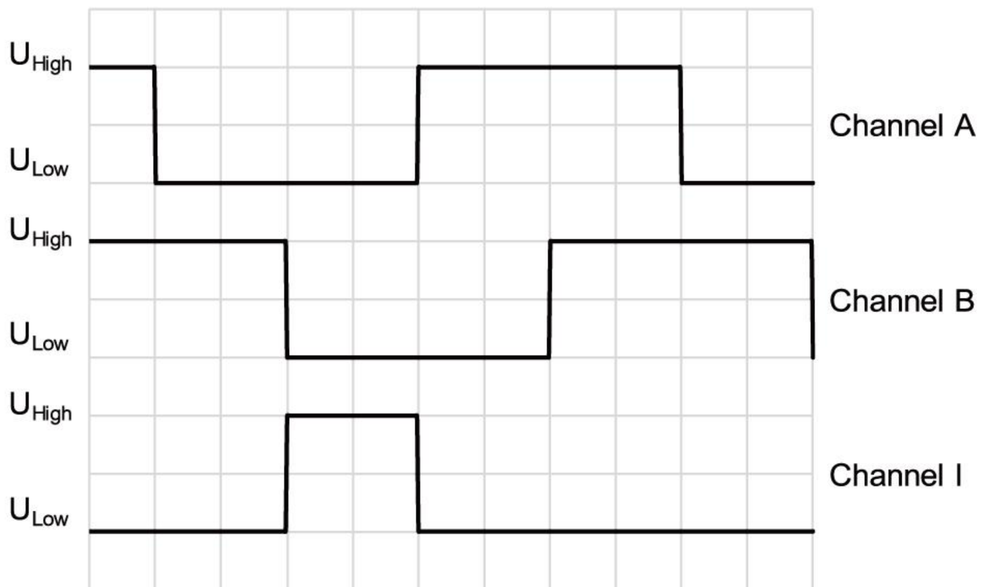

EN22AL/EN22BL
with counter-clockwise rotation as from the shaft end

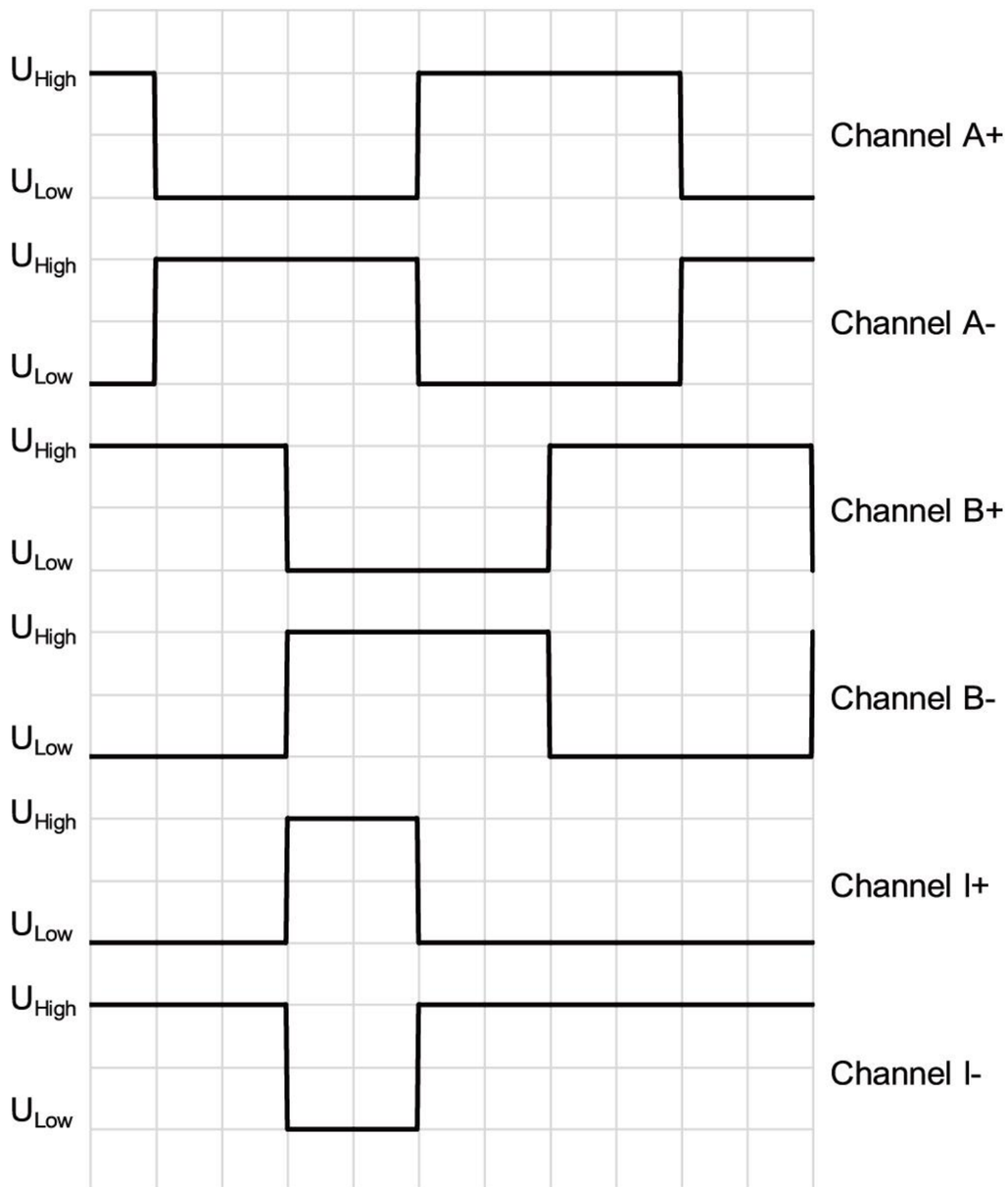

Connection

Conection	EN22A/EN22B	PVC	
Pin 1	A+	AWG28	yellow
Pin 2	NC	AWG28	grey
Pin 3	B+	AWG28	green
Pin 4	NC	AWG28	orange
Pin 5	I+	AWG28	blue
Pin 6	NC	AWG28	white
Pin 7	Vcc	AWG28	red
Pin 8	GND	AWG28	black

Conection	EN22AL/EN22BL	PVC	
Pin 1	A+	AWG28	yellow
Pin 2	A-	AWG28	grey
Pin 3	B+	AWG28	green
Pin 4	B-	AWG28	orange
Pin 5	I+	AWG28	blue
Pin 6	I-	AWG28	white
Pin 7	Vcc	AWG28	red
Pin 8	GND	AWG28	black

Subject: _____

Date: _____

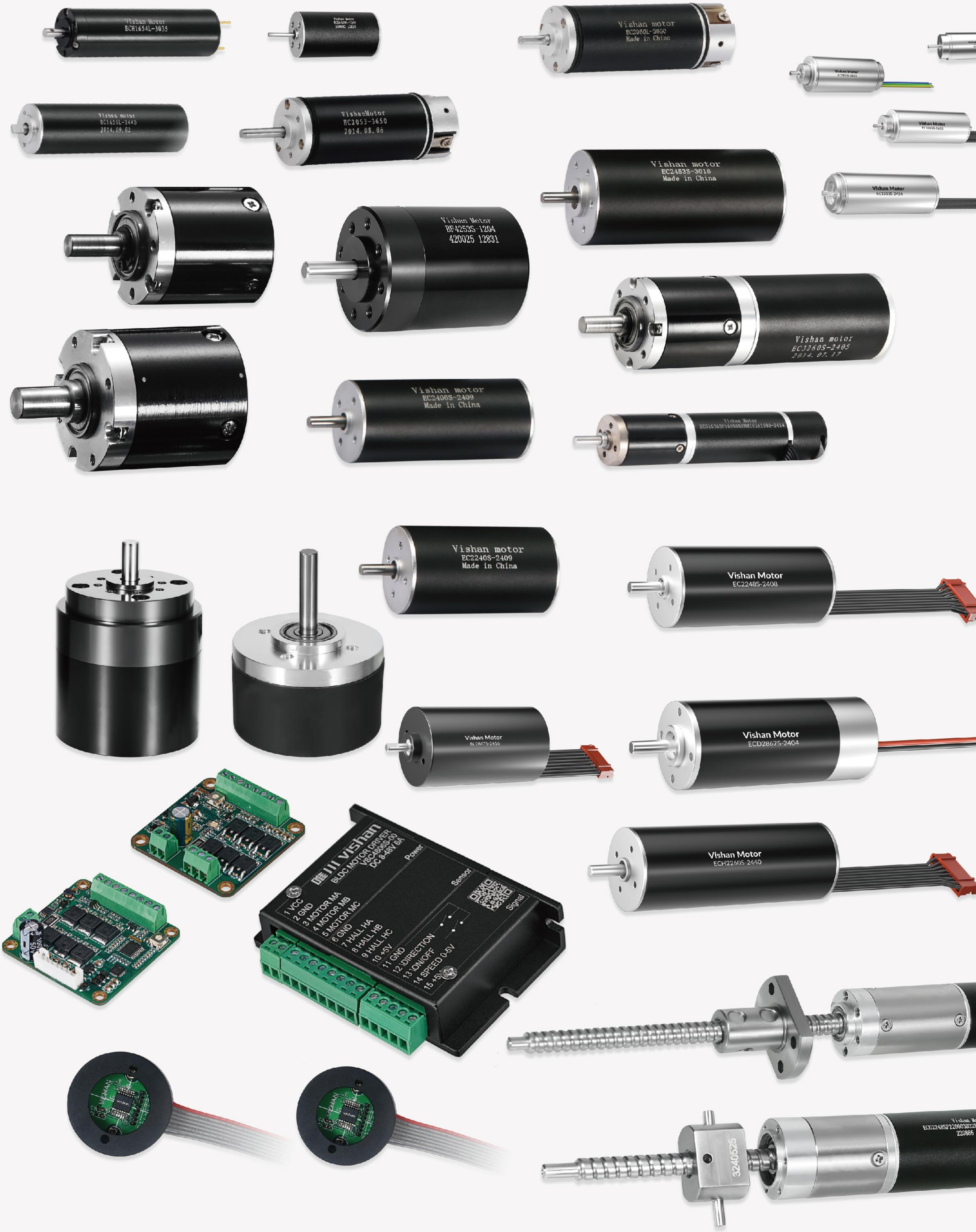
Vishan Motor
ECH1654L-3035
Vishan motor
EC1656L-2440
2014.09.02
VishanMotor
EC2053-3650
2014.08.06
Vishan motor
EC2060L-3650
Made in China
Vishan motor
EC2453S-3016
Made in China
Vishan Motor
EC1333S 2424
Vishan Motor
BF4253S-1204
420025 12831
Vishan motor
EC3260S-2405
2014.07.17
Vishan motor
EC2406S-2409
Made in China
Vishan motor
EC2240S-2409
Made in China
Vishan Motor
EC2248S-2408
Vishan Motor
BL28475-2416
Vishan Motor
ECD28675-2404
Vishan Motor
ECH2260S-2440
Vishan
BLDC MOTOR DRIVER
Power
Sensor
Signal
1 VCC
2 GND
3 MOTOR MA
4 MOTOR MB
5 MOTOR MC
6 GND
7 HALL HA
8 HALL HB
9 HALL HC
10 +5V
11 GND
12 DIRECTION
13 ON/OFF
14 SPEED 0-5V
15 +5V
32405525

vishan 唯川

BLDC MOTOR & CONTROLLER

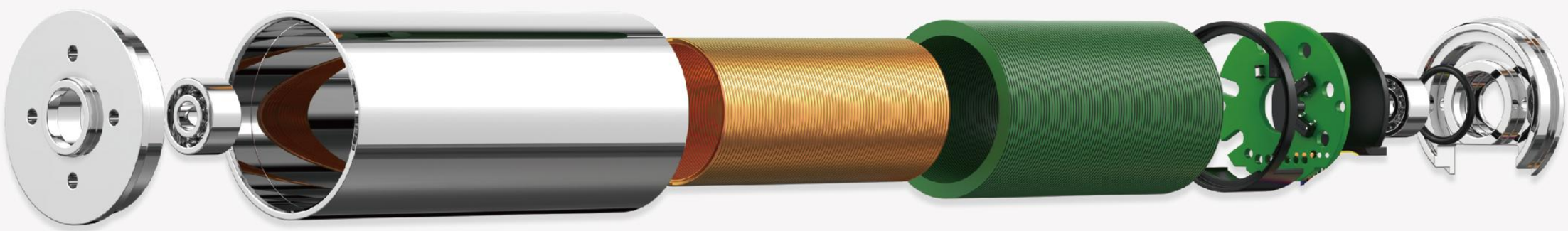

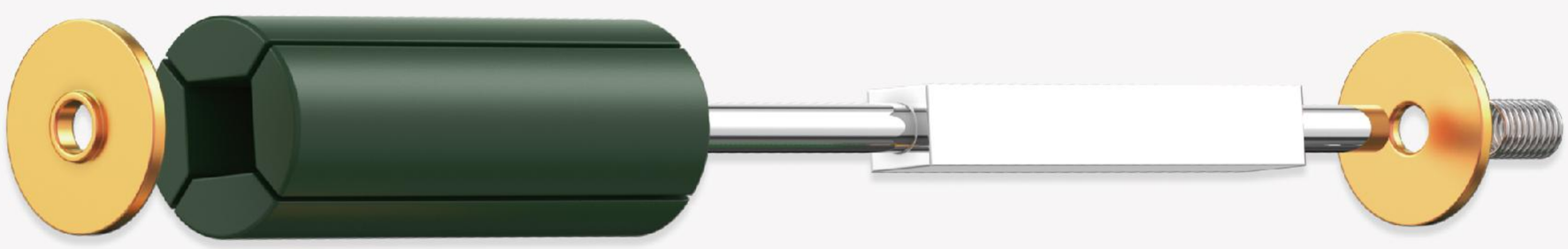

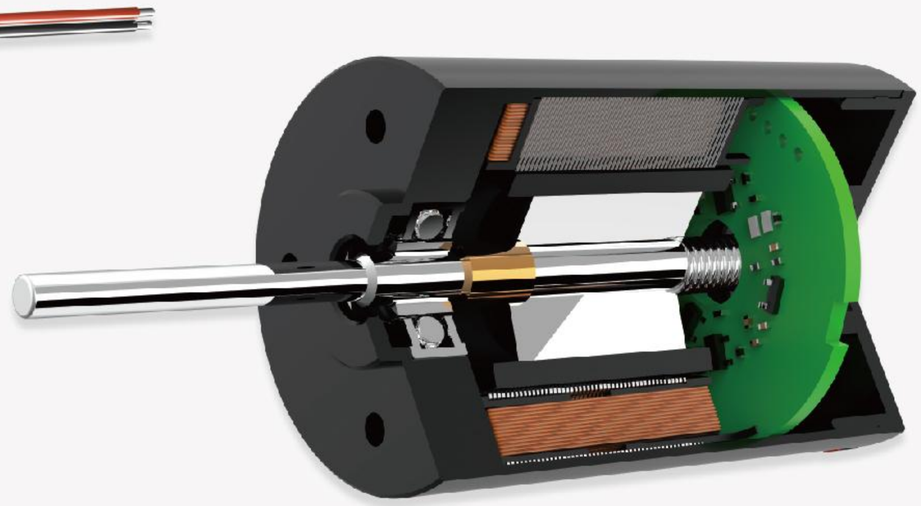

vishan 唯川

BLDC MOTOR & CONTROLLER

ShenZhen Vishan Technology Co.,Ltd

Tel: +86(0)755 29835880 **Mob:** +86(0)186 7666 0161
Email: sales@vishanmotor.com **Web:** www.vishanmotor.com
Address: B5-3, B4-4 Lehua industrial Park, No.37 Kengwei Road, Shiyan Town, Baoan District, ShenZhen, China